Celera MOTION
A Novanta Company

Zettlex IncOder™ Product Guide
Mini Range 37-58mm
Inductive Angle Encoders

MINI Revision 4.11.6 June 2019

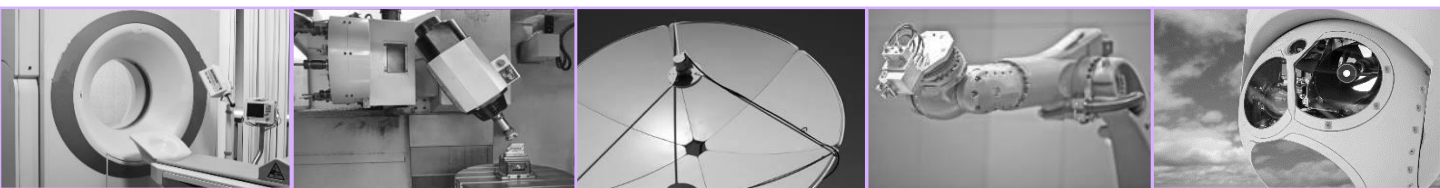

Celera MOTION
A Novanta Company

- ☑ No contacts
- ☑ No bearings
- ☑ No couplings
- ☑ No maintenance
- ☑ Absolute
- ☑ Compact
- ☑ Easy installation
- ☑ Accurate
- ☑ Robust
- ☑ Integral electronics
- ☑ >500 Million product options
- ☑ Economical
- ☑ Global support

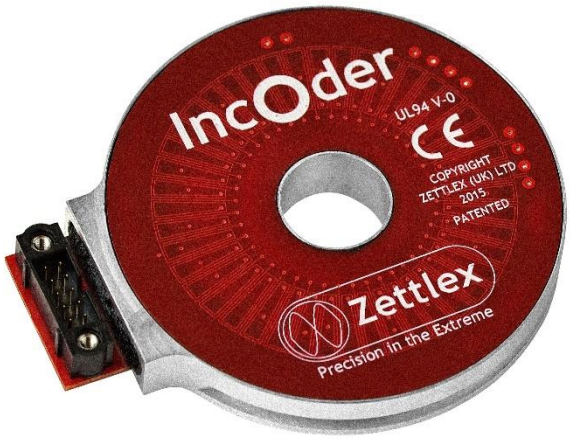

……..they tick all the boxes.

Contents

1. Introduction 4
2. Product Options 6
3. Manufacturing & Quality 7
4. Technical Data 8
4.1 58mm Servo Clamp Stator & Plain Rotor - Product Option INC-6 8
4.2 58mm Servo Clamp Stator & Shaft Clamp Rotor - Product Option INC-11 9
4.3 37mm Servo Clamp Stator & Set Screw Rotor - Product Option INC-4 10
4.4 37mm Screw Mount Stator & Plain Rotor - Product Option INC-8 11
4.5 37mm Installation 12
4.6 37mm Electronics Module Enclosure 12
4.7 Integral Axial Cable Option - Product Options AFLx & VFLx 13
4.8 Extended Product Range 14
4.9 Measurement & Electrical Data (58mm) 16
4.10 Environmental & Further Data (58mm) 17
4.11 Measurement, Electrical & Environmental Data (37mm) 18
5. Customised Products 19
6. Communication Interfaces 20
6.1 Output Resolution 20
6.2 Multi-Turn or Single Turn 20
6.3 Zero Point, Zero Set & Zero Reset for Digital Outputs 20
6.4 Synchronous Serial Interface - Product Options SSI1-SSI9 21
6.5 Asynchronous Serial Interface - Product Options ASI1-2 24
6.6 Serial Peripheral Interface - Product Option SPI1 25
6.7 A/B/Z Pulse Interface – Product Options ABZ1 to ABZ6 27
6.8 BiSS-C Interface – Product Option BIS1-3 28
7. Connector Diagrams 29
7.1 Connector Diagram & Zero Setting for 37mm 29
8. Product Ordering 30
8.1 Product Ordering 58mm 30
8.2 Product Ordering 37mm 31
8.3 Product Ordering - General 32
8.4 Product Ordering - Extended Range 32
9. Accessories 33
10. Frequently Asked Questions 36

1. Introduction

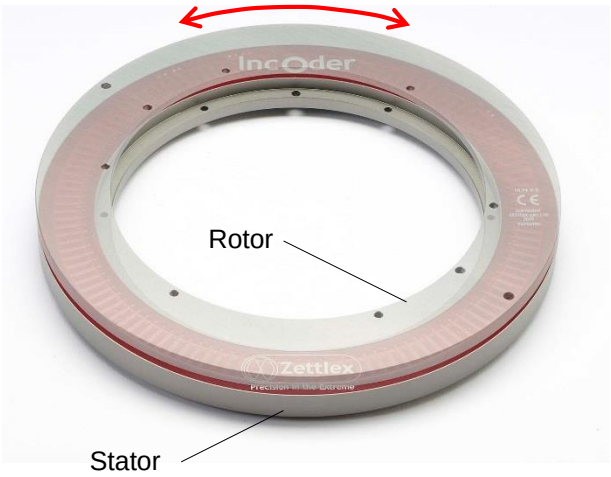

Zettlex IncOders are non-contact devices for precise angle measurement. They use an inductive technique, similar to that used by electrical transformers. IncOders may be considered as an inductive encoder.

IncOders are well suited to harsh environments - where potentiometers, optical or capacitive devices might be unreliable.

IncOders have two main parts each shaped like a flat ring: a Stator and a Rotor. The Stator is powered and measures the angular position of the passive Rotor.

A big bore and low axial height allows easy integration with through-shafts, slip-rings, direct drive motors, optical-fibres, pipes or cables.

IncOder technology is proven technology – tried and tested in tough conditions on land, sea and in the air.

IncOders require no service or maintenance and so they are 'fit and forget' devices.

They are designed and built so they won't let you down when the going gets tough.

IncOders make it easy to achieve high precision, high reliability angle measurement.

There is no need to consider bearing alignment, seals or wearing parts.

Whereas optical or capacitive sensors can be unreliable in harsh conditions – notably with condensation or dust - IncOders are generally unaffected by foreign matter and IP68 rated versions are available.

Unlike capacitive devices, there is no need to earth the Rotor or Stator.

Robust, aluminium alloy housings with SurTec650 surface finish and monolithic constructions are used throughout.

1. Introduction

IncOders contain all the electronics to receive power and output a signal. The output signal shows the position of the Rotor relative to the Stator.

Devices with absolute digital outputs, such as SSI, SPI etc., are truly absolute which means that they need no motion at power up to determine position. Some devices (58mm) offer the option of incremental (A/B pulse) output.

Compliant or special couplings are not required, so the Rotor & Stator can simply be fixed directly to the host product.

Precise mechanical mounting is not necessary to achieve high measurement performance and there are no bearings.

The measurement performance stated in this Product Guide is guaranteed provided that the IncOder is installed as per its installation tolerances.

IncOders have a solid track record in demanding applications such as industrial machinery, security and defence equipment, naval and marine equipment. IncOders are designed and built in ISO-9001 accredited facilities in the United Kingdom; contain no ITAR restricted components and do not require an export licence unless they are >1000mm diameter.

Applications include :-

- Rotary joints & gimbals
- Actuator servos & motor encoders
- Electro-optical & infra-red camera systems
- Heliostats & solar equipment
- Robotic arms & CNC machine tools
- Antenna pointing devices & telescopes
- Packaging & laboratory automation
- Medical scanners & surgical equipment
- Cranes & telescopic manipulators
- Test & calibration equipment.

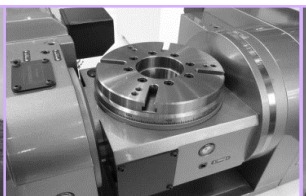

2. Product Options

The IncOder range offers millions of product options. **Specify the right product for your application using the IncOder Product Option / Part Number (see Section 8).** Each IncOder contains one Stator and one Rotor. Stators & Rotors are not matched pairs – in other words, either element may be swapped out for replacement, if necessary. The range of options are:-

Mechanical Format : mechanical formats include screw mount and servo clamp stators as well as plain, shaft clamp and set-screw rotors – see Section 4.

IncOder Size : stated as outer diameter: 37 and 58mm in the Mini IncOder range – see Section 4.

Resolution Options : up to 17bits - see Section 6.1.

Communication Interface Options:
Synchronous Serial Interface – see Section 6.4 for various formats (Product Options SSI1-9)
Asynchronous Serial Interface – see Section 6.5 (Product Option ASI1 & ASI2)
Serial Peripheral Interface – see Section 6.6 (Product Option SPI1)
A/B/Z pulses – see Section 6.7 (Product Option ABZ1-6)
BISS-C – see Section 6.8 (Product Options BIS1-3)

Connection Options : radial and axial connections as well as integral cables – see Section 4.6.

Voltage Options : 5, 12 or 24VDC.

Extended Range Options : these options are only intended for ultra high-reliability applications which may require extended thermal stress screening, bake-out, high shock/vibration constructions, leaded solder, low or high operating temperatures – see Section 4.8.

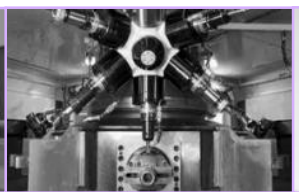

3. Manufacturing & Quality

IncOders are designed, made, tested and shipped by our facility in Cambridge, UK. Support is provided by the same site or through our global network of partners.

IncOder manufacturing processes are well established, having been perfected over years and the production of thousands of products. Every IncOder is serial numbered and tested according to a rigorous acceptance test procedure before dispatch. Detailed test records for every IncOder are stored by Celera Motion.

Certificates of conformity are available as well as a RoHS compliance certificate and a REACH statement. IncOders are not ITAR restricted and use no ITAR components. A UK government export license is typically not required for the devices specified in this Product Guide.

All design, manufacturing and commercial processes operate under a comprehensive ISO-9001:2015 quality management system, developed by Zettlex engineers. The quality management system is subject to regular internal and external audit – including an annual audit by a UKAS accredited, independent authority. Zettlex is also certified for the design and manufacture of intrinsically safe (ATEX) sensors under BS EN 13980. Electronics manufacturing is to IPC Class III standards.

A copy of our ISO-9001 and ATEX certificate is available on www.celeramotion.com.

4.1 58mm Servo Clamp Stator & Plain Rotor - Product Option INC-6

NOTES

1. **3D CAD IGES FILES AVAILABLE ON WWW.CELERAMOTION.COM**
2. ALL DIMS IN mm – DO NOT SCALE
3. 3RD ANGLE PROJECTION
4. AL. ALLOY HOUSINGS SURTEC650 SURFACE PROTECTION 0.11-0.50g/m^2
5. UNLESS STATED, TOLERANCES:-
   - 0 DECIMAL PLACES = ±0.5
   - 1 DECIMAL PLACES = ±0.2
   - 2 DECIMAL PLACES = ±0.1

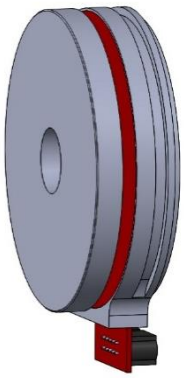

PLAN VIEW SHOWING AC2 CONNECTION

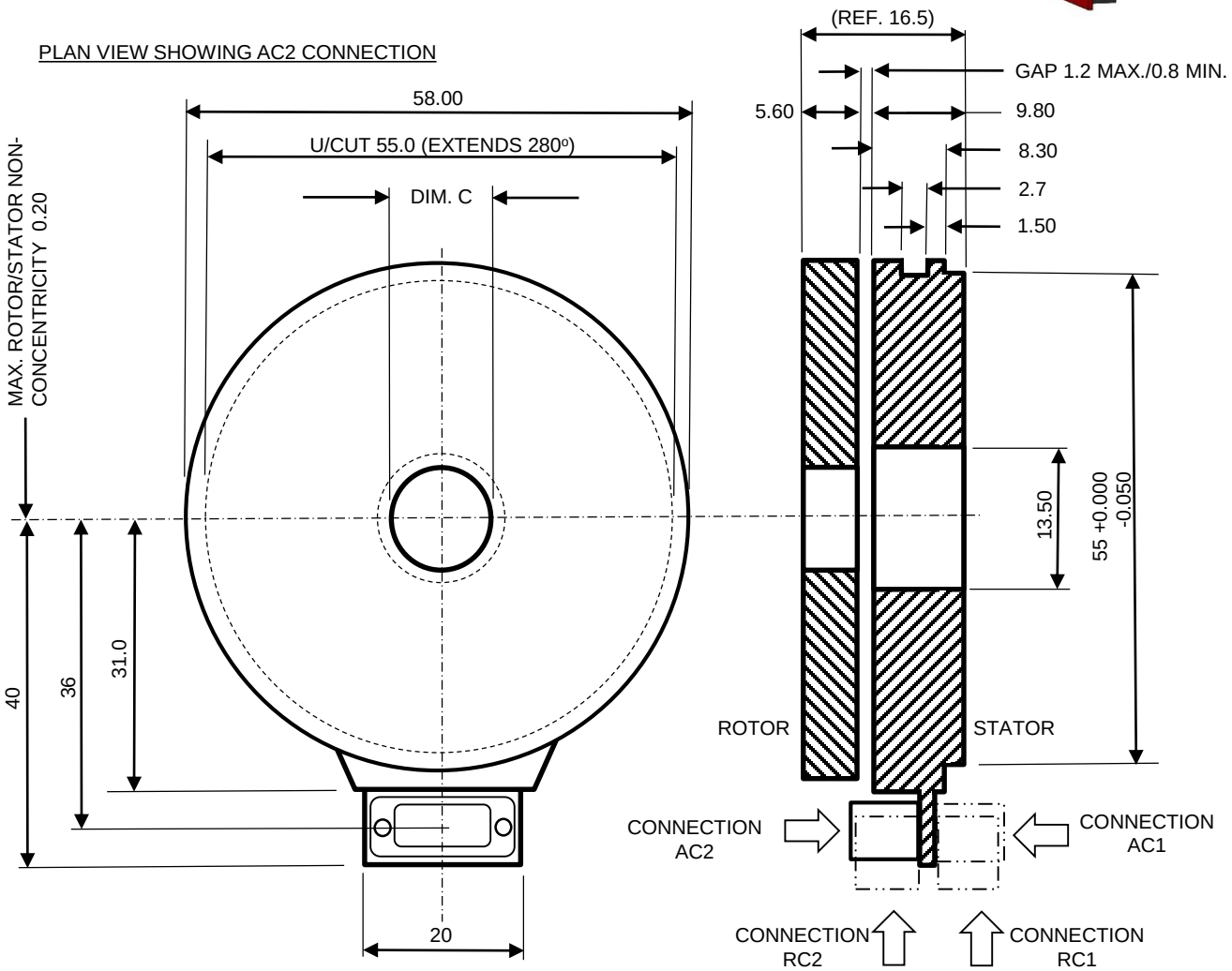

SCRAP VIEW SHOWING VFLx CONNECTION

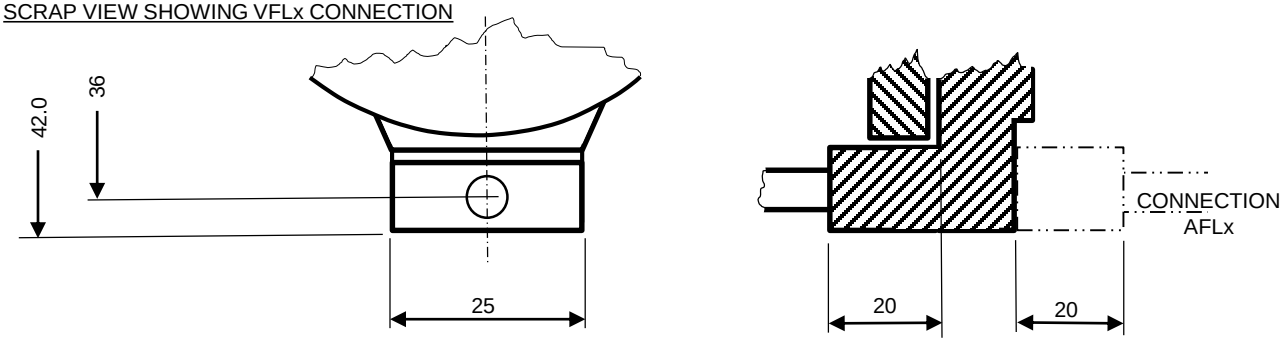

OPTIONS FOR DIM C = 6.00, 10.00, 12.00 & 12.70 ALL WITH H7 TOLERANCE.
OPTIONS FOR CONNECTOR = AC1, AC2, RC1, RC2, AFL1 T0 5, VFL1 TO 5 - SEE SECTION 8 ON HOW TO SELECT BY PART NUMBER.

4.2 58mm Servo Clamp Stator & Shaft Clamp Rotor - Product Option INC-11

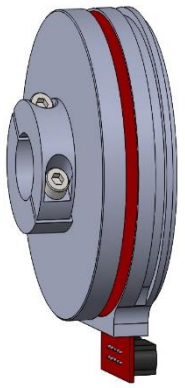

NOTES

1. **3D CAD IGES FILES AVAILABLE ON WWW.CELERAMOTION.COM**
2. ALL DIMS IN mm – DO NOT SCALE
3. 3RD ANGLE PROJECTION
4. AL. ALLOY HOUSINGS SURTEC650 SURFACE PROTECTION 0.11-0.50g/m^2
5. UNLESS STATED, TOLERANCES:-
   - 0 DECIMAL PLACES = ±0.5
   - 1 DECIMAL PLACES = ±0.2
   - 2 DECIMAL PLACES = ±0.1

PLAN VIEW SHOWING AC2 CONNECTION

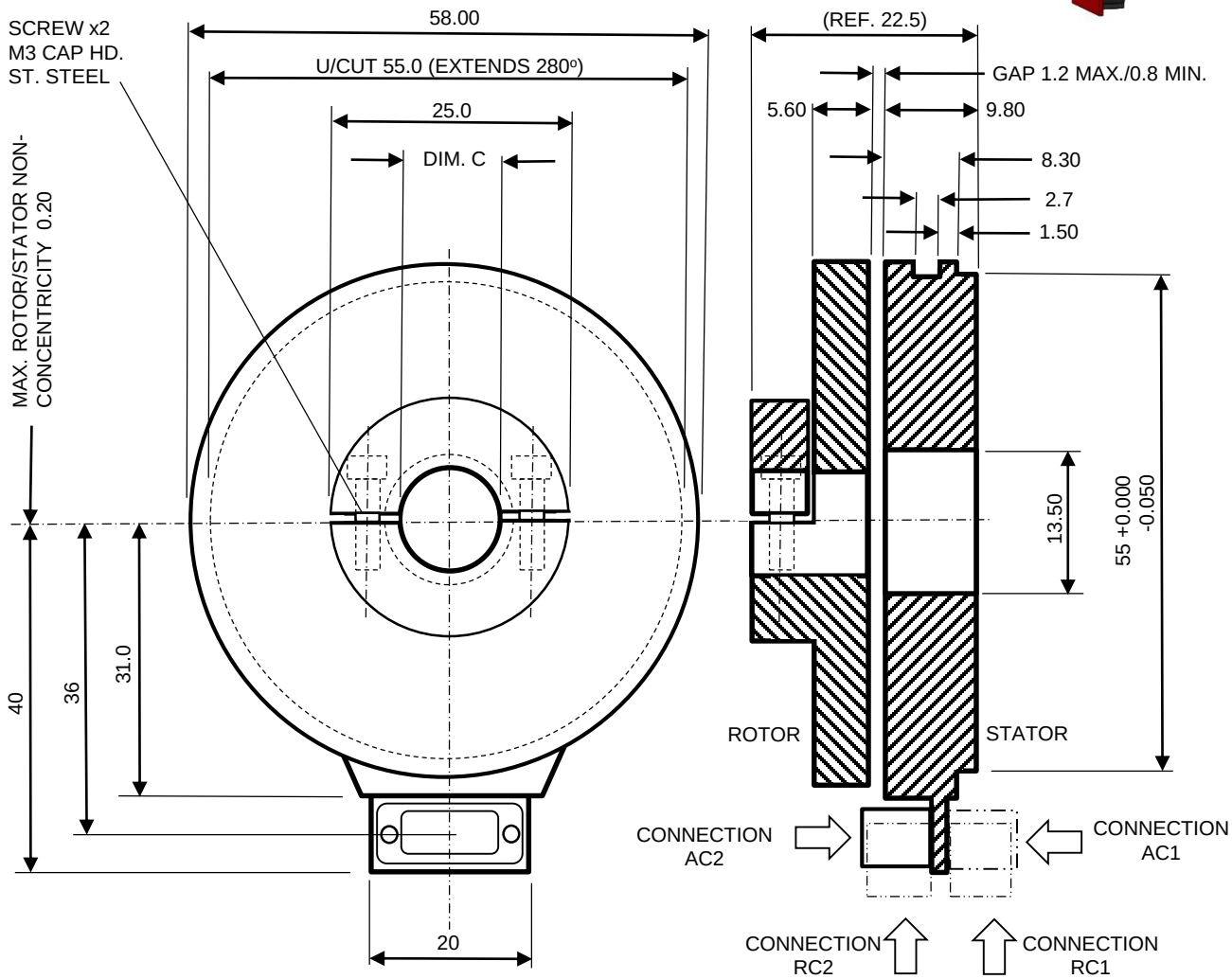

SCRAP VIEW SHOWING VFLx CONNECTION

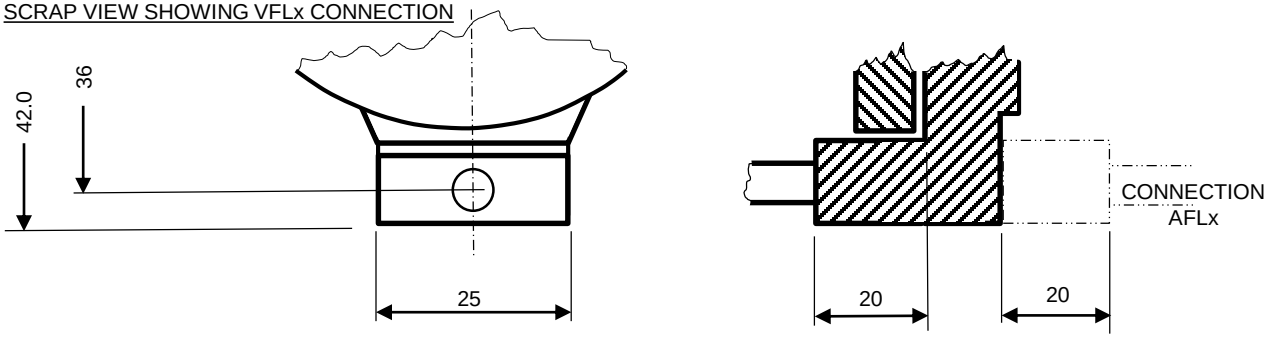

OPTIONS FOR DIM C = 6.00, 10.00, 12.00 & 12.70 ALL WITH H7 TOLERANCE.
OPTIONS FOR CONNECTOR = AC1, AC2, RC1, RC2, AFL1 T0 5, VFL1 TO 5 - SEE SECTION 8 ON HOW TO SELECT BY PART NUMBER.

4.3 37mm Servo Clamp Stator & Set Screw Rotor - Product Option INC-4

NOTES

1. **3D CAD IGES FILES AVAILABLE ON WWW.CELERAMOTION.COM**
2. ALL DIMS IN mm – DO NOT SCALE
3. 3RD ANGLE PROJECTION
4. AL. ALLOY HOUSINGS SURTEC650 SURFACE PROTECTION 0.11-0.50g/m²
5. UNLESS STATED, TOLERANCES:-
   - 0 DECIMAL PLACES = ±0.5
   - 1 DECIMAL PLACES = ±0.2
   - 2 DECIMAL PLACES = ±0.1

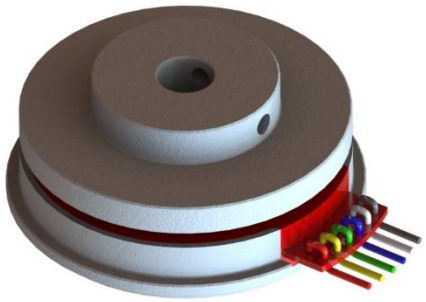

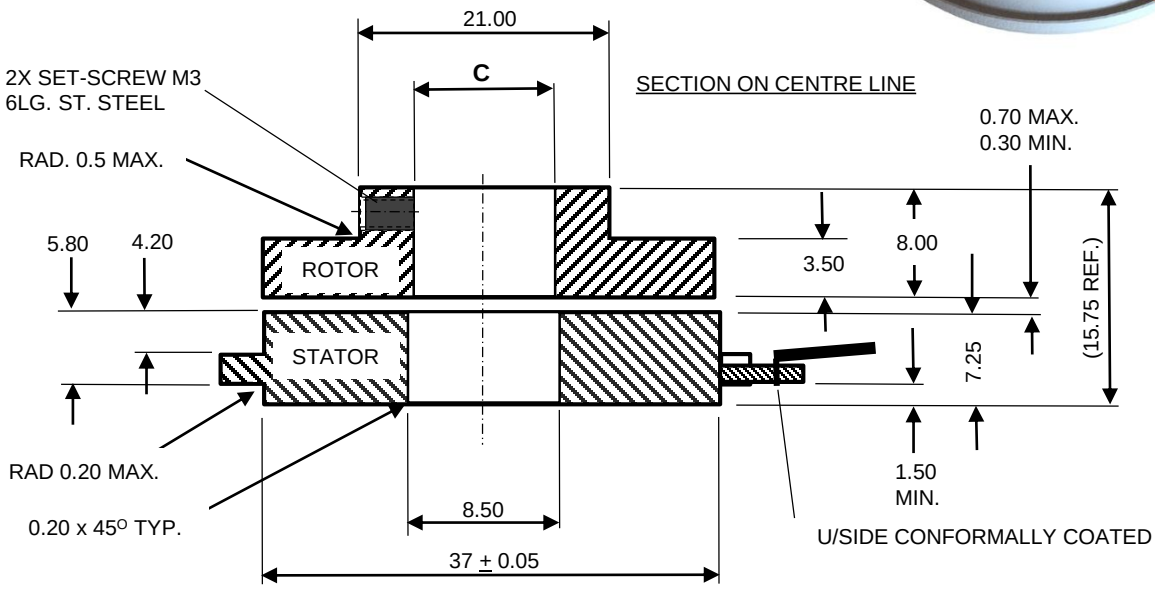

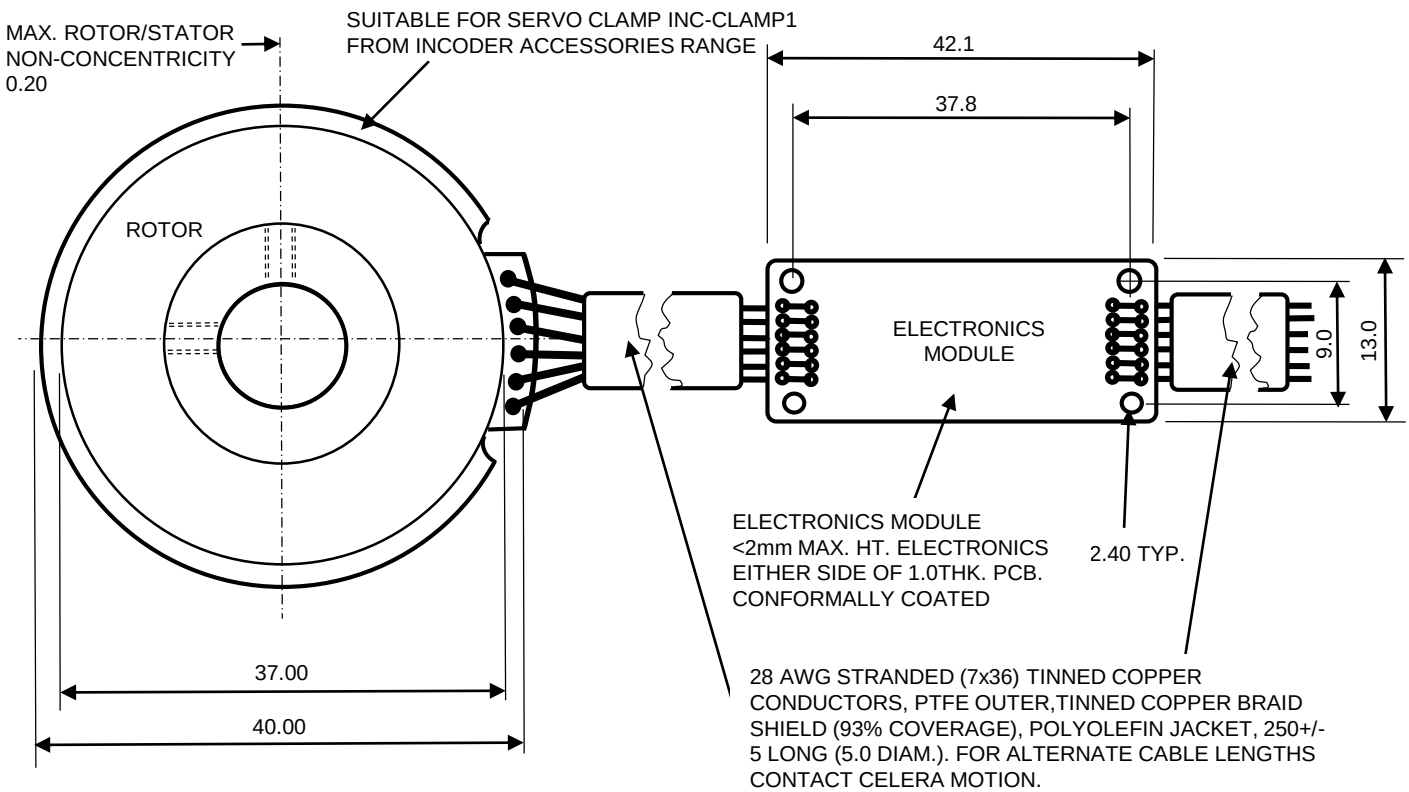

OPTIONS FOR DIM C = 5.00; 6.00; 6.35 AND 8.00 ALL WITH H7 TOLERANCE - SEE SECTION 8 ON HOW TO SELECT BY PART NUMBER.

4.4 37mm Screw Mount Stator & Plain Rotor - Product Option INC-8

NOTES

1. **3D CAD IGES FILES AVAILABLE ON WWW.CELERAMOTION.COM**
2. ALL DIMS IN mm – DO NOT SCALE
3. 3RD ANGLE PROJECTION
4. AL. ALLOY HOUSINGS SURTEC650 SURFACE PROTECTION 0.11-0.50g/m^2
5. UNLESS STATED, TOLERANCES:-
   - 0 DECIMAL PLACES = ±0.5
   - 1 DECIMAL PLACES = ±0.2
   - 2 DECIMAL PLACES = ±0.1

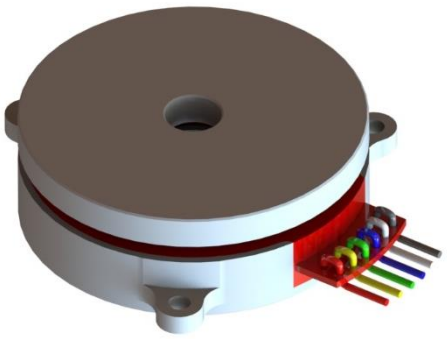

SECTION ON CENTRE LINE

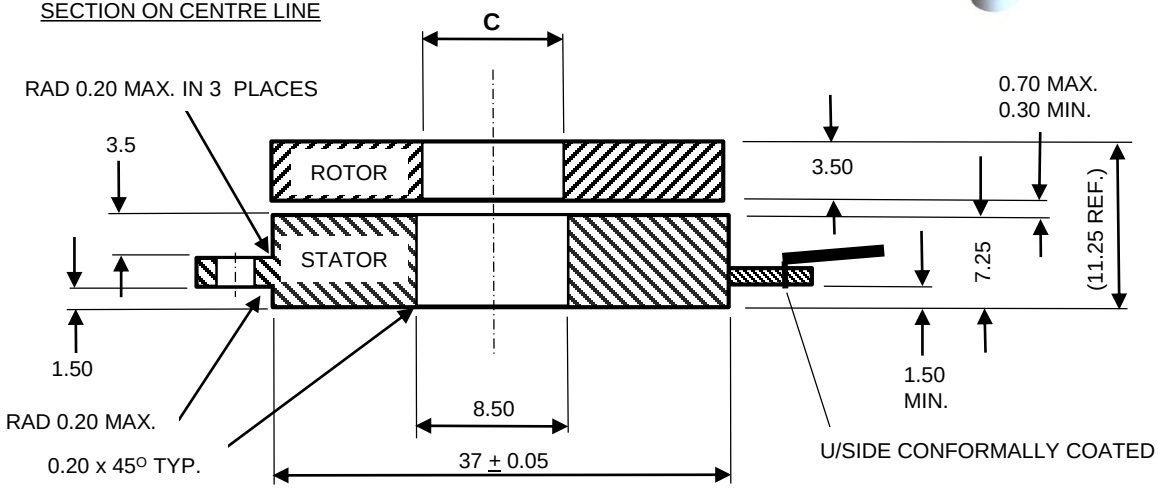

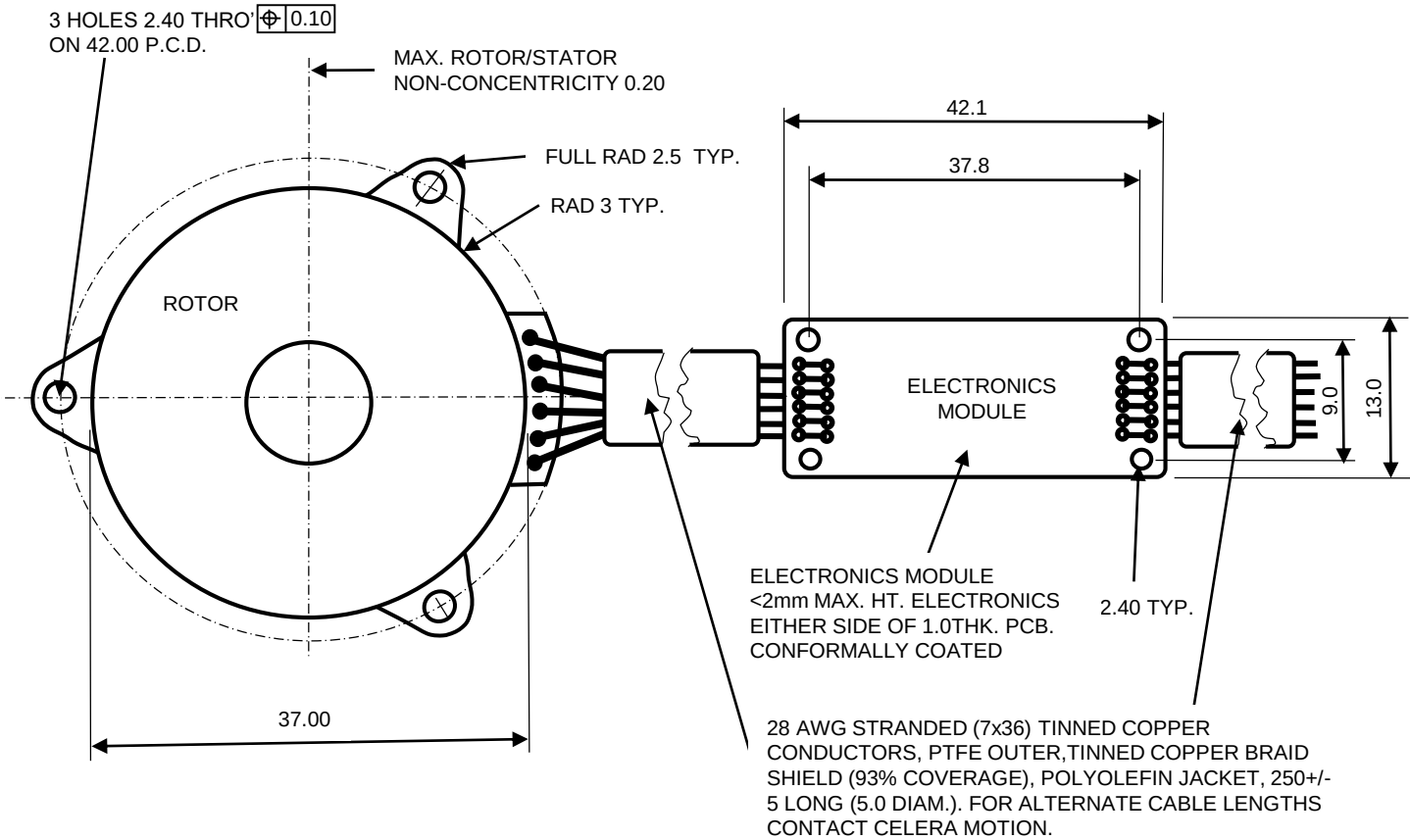

OPTIONS FOR DIM C = 5.00; 6.00; 6.35 AND 8.00 ALL WITH H7 TOLERANCE - SEE SECTION 8 ON HOW TO SELECT BY PART NUMBER.

4.5 37mm IncOder Installation

37mm IncOders can be installed in various ways. The following sketches show some examples. Provided axial gap and concentricity tolerances are maintained, the stated measurement performance will be met.

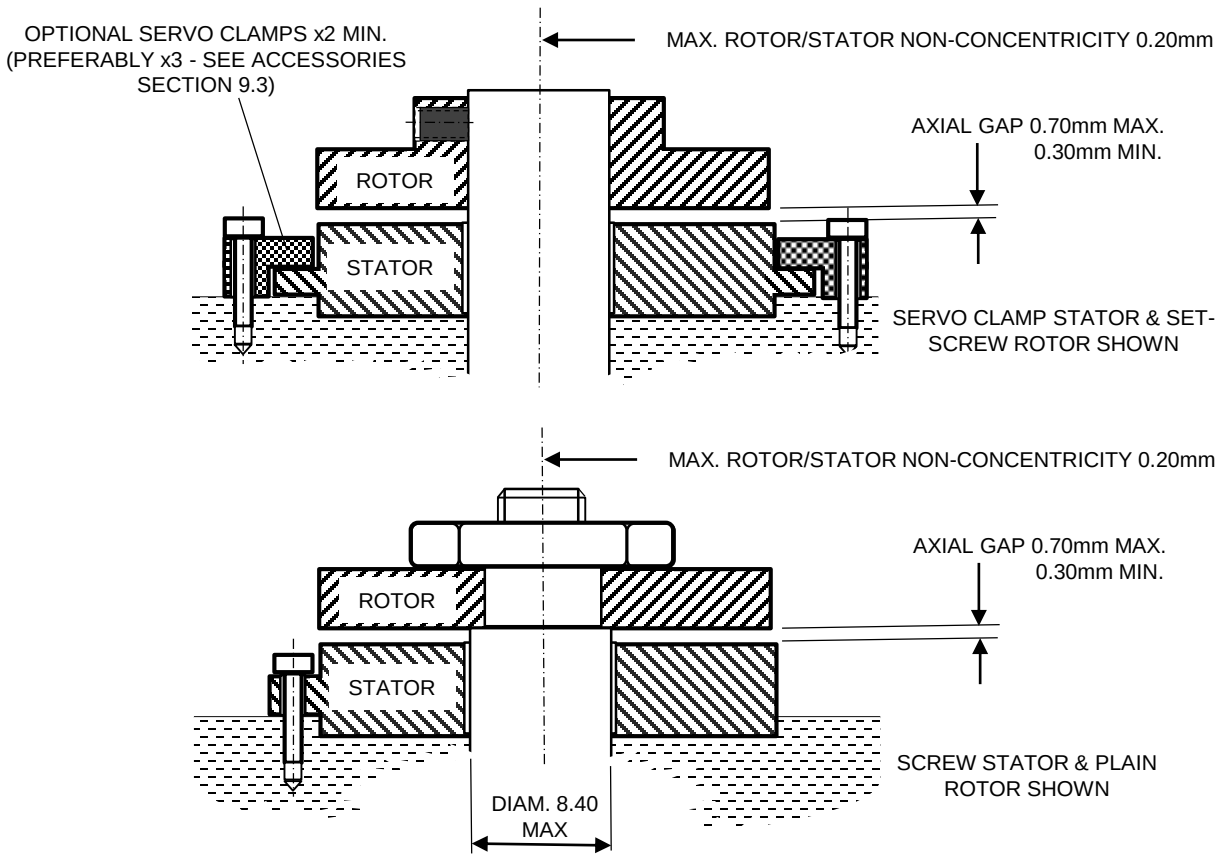

4.6 37mm Electronics Module Housing Product Option RC373 & RC374

37mm IncOder Electronics Modules are available with a protective, mechanical housing as shown below (Product Option RC373 with 250+250mm cable lengths or RC374 with 250+2000mm cable lengths). The Housing is aluminium alloy and Surtec protected. Weight of Housing (excluding cables but including Electronics Module) is 25grams. Housing lid is removable for access to Zero Set/Reset function.

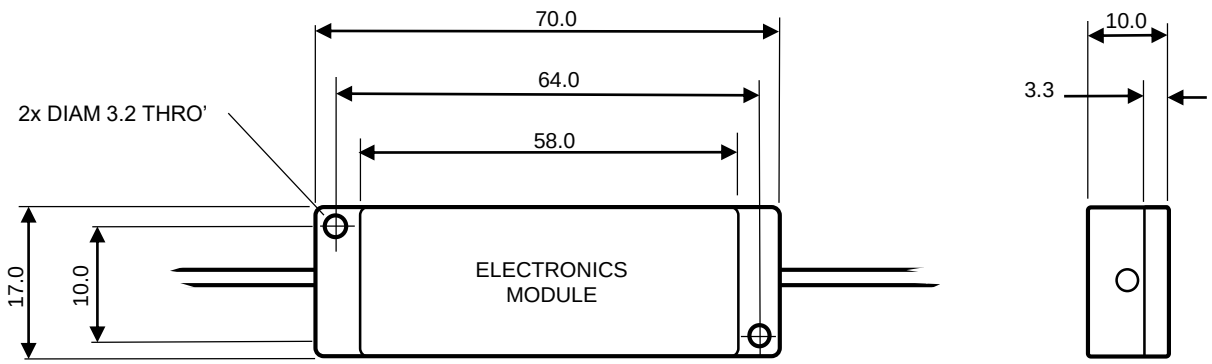

4.7 Integral Axial Cable (58mm only) Product Options AFL1-52 & VFL1-52

Integral Axial Cables are for wet and/or severe shock/vibration environments for all sizes other than 37mm. The connector is replaced by an integral cable and a block which covers the cable to IncOder joint.

- **AFL1 or VFL1 Integral Axial Cable.** IP67 for 1 hour & 1m depth. 2m long cable, 10-way, 24 AWG multi-strand copper wire, semi-rigid PVC insulation & outer jacket, twisted pairs, overall foil shield, tinned copper drain wire. Diam. 7.3mm. Min. flexing rad. = 76mm with 1-off bend rad. (e.g. on installation) of 20mm. Operating temp.: -30 to 85ºC.
- **AFL2 or VFL2 Integral Axial Cable, Sealed Rotor & Stator.** IP68 to 100m depth. Cable as per AFL1.
- **AFL3 or VFL3 Integral Axial, High Flex Cable.** IP67 for 1 hour & 1m depth and suitable for repeat bending (>5M cycles). IGUS CF11.02.05.02 cable, 2m long, TPE outer jacket, shielded, twisted pairs, 24AWG multi-strand, copper wire, PVC & halogen free. Hydrolysis, oil, UV & microbe resistant. Diam. 9.0mm. Min. radius 45mm (fixed) & 61mm (flexing). Operating temp.: -35 to +85°C (flexing) or -40 to +85 °C (fixed). Operating temps. limited by IncOder, not cable.
- **AFL32 or VFL32 Integral Axial, Hi-Flex Cable, Sealed Rotor & Stator.** IP68 to 100m. Cable as AFL3.
- **AFL5 or VFL5 Integral Axial, PTFE/MIL-Spec Cable**. IP67 for 1 hour & 1m depth. 1.1m cable with individual BS 3G 210 Type A PTFE coated 24AWG multi-strand, copper wire, twisted pairs, in overall Tin plated copper braid, minimum coverage 93%, 38/0.1 braided screen. MIL-1-23053/12 Class 3 AMS3584 PTFE outer sleeve. This non-flammable cable is resistant to oils, lubricants, fuels and is flexible. Min. flex rad. of 76mm with 1 off bend rad. (e.g. on installation) of 8mm. Operating temp.: -60 to +105ºC (limited by IncOder, not cable).
- **AFL52 Integral Axial, PTFE/MIL-Spec Cable, Sealed Rotor & Stator**. IP68 to 100m. Cable as per AFL5.

Table A - Connections for AFL1, VFL1, AFL2, VFL2, AFL5, VFL5, AFL52, VFL52

Pair No.	Colour	Connector Pin (For Info. Only)	Signal (SSI1-9 & SPI & BISS-C)	Signal (ASI1 & ASI2)	Signal (0-10V)	Signal (A/B pulses & Z Ref.)
1	Black	7	Data B	Data B	Ref. Voltage	A complement
1	Green	5	Data A	Data A	Signal	A
2	Black	6	Clk B	Not used - do not connect	Direction Set	B complement
2	Blue	8	Clk A	Not used - do not connect	Span Set	B
3	Black	9	0V	0V	0V	0V
3	Red	10	V_{supply}	V_{supply}	V_{supply}	V_{supply}
4	Black	1	Zero Set	Zero Set	Zero Set	Z Ref Set
4	Yellow	2	Zero Reset	Zero Reset	Zero Reset	Z Ref. Reset
5	Black	3	Not used - do not connect	Not used - do not connect	Not used - do not connect	Z
5	White	4	Not used - do not connect	Not used - do not connect	Not used - do not connect	Z complement

Table B - Wiring connections for AFL3, AFL32, VFL3 & VFL32

Pair No.	Colour	Connector Pin (For Info. Only)	Signal (SSI1-9 & SPI & BISS-C)	Signal (ASI1 & ASI2)	Signal (0-10V)	Signal (A/B pulses & Z Ref.)
1	Grey	7	Data B	Data B	Ref. Voltage	A complement
1	Pink	5	Data A	Data A	Signal	A
2	Yellow	6	Clk B	Not used - do not connect	Direction Set	B complement
2	Green	8	Clk A	Not used - do not connect	Span Set	B
3	Blue	9	0V	0V	0V	0V
3	Red	10	V_{supply}	V_{supply}	V_{supply}	V_{supply}
4	Violet	1	Zero Set	Zero Set	Zero Set	Z Ref Set
4	Black	2	Zero Reset	Zero Reset	Zero Reset	Z Ref. Reset
5	Brown	3	Not used - do not connect	Not used - do not connect	Not used - do not connect	Z
5	White	4	Not used - do not connect	Not used - do not connect	Not used - do not connect	Z complement

Cable Lengths for AFL & VFL Product Options. If a non-standard cable length is required, simply change the part number from, for example, AFL1 to AFL1.5.0 for a 5.0m cable or from AFL32 to a AFL32.0.9 for a 0.9m cable. For shorter cables there is no price difference. There may be a price variation for integral cables longer than standard – contact Celera Motion or your local rep. General tolerance on cable lengths is ±50mm.

Connectors for AFL & VFL Product Options. Fitting connectors such as D-38999 military type or hermetically sealed connectors is a frequent requirement. Please contact Celera Motion or your local representative, stating cable type (preferably chosen from list above), cable length & connector type.

4.8 Extended Product Range

Extended Product Range Options are not necessary for most applications. In some, such as ultra high-spec applications in defence, aerospace and extreme duty industrial applications, Extended Product Options may be required. Extended Product Options increase product costs & lead-times and should only be specified if necessary.

Electronics with Leaded Solder – Extended Product Option 'P'

Standard IncOders use RoHS compliant solder for electronic components. In some applications, the use of leaded solder is mandatory. Specify 'P' at the end of the standard Product Number.

Extended Thermal Stress Screen/Bake-Off – Extended Product Option 'B'

Standard IncOders undergo a rigorous final test after assembly. In some applications, extended thermal stress screening (or 'burn-in') is required. Similarly, some applications require eradication of any volatile organic compounds. An extended thermal stress screen / bake-out for 24 hours at 70ºC prior to final testing may be specified. Specify 'B' at the end of the standard Product Number.

Very High Shock & Vibration – Extended Product Option 'G' (58mm only)

Standard IncOders are designed for high shock & vibration environments, often found in airborne, marine & military vehicles. In applications with prolonged, very high shock (to 500g for 11ms) and/or very high vibration environments (to 100g for 10-2000Hz) the Very High Shock & Vibration Product Option should be specified. Example applications include (direct mounted) weapons systems, wing mounted aerospace equipment and earth moving vehicles. This option is available in all IncOder sizes, formats and electrical interfaces but, preferably, should be used with integral cables (type AFL1, 2, 3 or 5). 'G' format IncOders have a reinforced internal structure. External mechanical & electrical interfaces are unchanged. Local strain relief of cables must be used in all applications with shock or vibration. Specify 'G' at the end of the standard Product Number.

Engraved Data – Extended Product Option 'E'

Standard IncOder Stators carry a serial number on a self-adhesive, metalized label. In some applications, a label is not acceptable and product data must be engraved. Engraved data includes part number & serial number on exterior faces of housing. Specify 'E' at the end of the standard Product Number.

Cold Temperature Option – Extended Product Option '12CT' or '24CT'

Standard IncOders have a lower operating temperature limit of -45ºC. For prolonged or frequent operation at temperatures <-45ºC, a cold temperature version (lower operating temperature of -60ºC) should be specified using the 12CT or 24CT Extended Product Option in the voltage supply section of the part number. For operating temperatures <-60ºC consult Celera Motion.

High Temperature Option – Extended Product Option '5HT' (58mm only)

Standard IncOders have an upper operating temperature limit of +85ºC. For prolonged or frequent operation at temperatures >85ºC, a high temperature version (upper operating temperature of +105ºC) should be specified using the 5HT Extended Product Option in the voltage supply section of the part number. Only available with SSI1-9, SPI, ASI1-2 & BiSS-C communications. Careful selection of the appropriate cable is required for high operating temperatures. Generally, the high temperature cable INC-CAB3-2-HT should be specified or the AFL5/ALF52 integral cable. For operating temperatures >105ºC consult Celera Motion.

4.8 Extended Product Range

Prolonged Immersion, Salt Spray or Extreme Dust Conditions – Extended Product Option 'C'
Standard IncOders will operate reliably if subject to moist, wet, dusty or salt spray conditions for short or infrequent periods. Such conditions include immersion in mineral oil or water – depending on cable connection selected. If the IncOder will be subject to prolonged periods of high levels of condensing moisture, immersion in water, exposure to salt atmospheres or potential abrasion by dust or grit then Extended Product Option C is recommended. This option provides additional protection to the IncOder's sensing faces using an acrylic conformal coat. This option is not required if immersion is in mineral oil. This option is not required (because it is already included) if a sealed version of integral axial cable is selected e.g. AFL2, AFL32, AFL42 or AFL52. Specify 'C' at the end of the standard Product Number.

High Pressure Option – Extended Product Option 'V' (58mm only)
If operation at high pressures is needed (for example, sub-sea equipment submerged in mineral oil) then the use of Extended Range Product Option 'V' is recommended. Maximum recommended operating pressure is 4,000psi or 280Bar. Higher operating pressures may be possible subject to qualification by the user in host equipment. 'V' designated products undergo a hard epoxy encapsulation process which ensures absence of internal voids. Specify 'V' at the end of the standard Product Number.

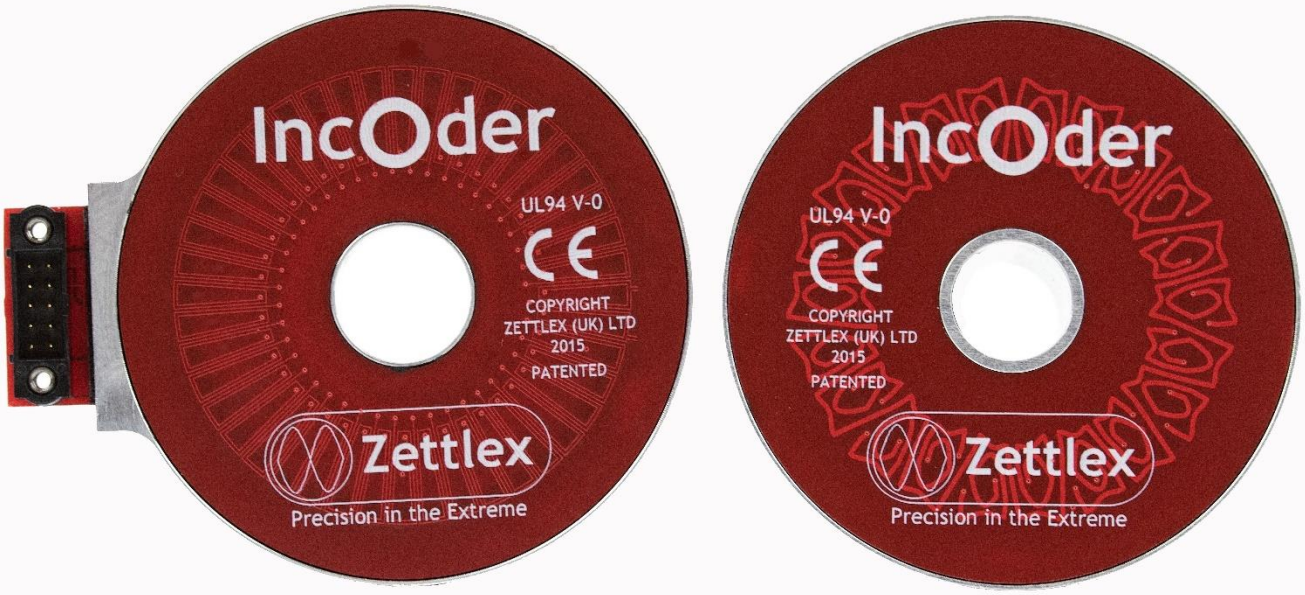

4.9 Measurement & Electrical Data (58mm)

Measurement & Elec. Data for Digital Comms Interfaces - Product Options SSI1-9, SPI, ASI1, ASI2 & BiSS-C

	INC-x-58	
Measurement	Absolute over 360°. Note this is true absolute - no motion required at start up	
Resolution (121001 Product Option)	12bits 4,096counts per rev 316.4arc-secs 1536micro-rads	
Resolution (141001 Product Option)	14bits 16,384counts per rev 79.1arc-secs 384micro-rads	
Resolution (161001 Product Option)	16bits 65,536counts per rev 19.77arc-secs 96micro-rads	
Resolution (171001 Product Option)	17bits 131,072counts per rev 9.89arc-secs 12micro-rads	
Repeatability	+/-1	count
Static Accuracy over 360°	≤150arc-seconds or 0.73milliradians	
Internal Position Update Period	<0.1	millisecond
Thermal Drift Coefficient	≤0.50	ppm/K Full-Scale
Max. Speed for Angle Measurement	10,000	r.p.m.
Data Outputs	RS422 Compatible, supports SSI (Serial Synchronous Interface), asynchronous serial interface, SPI or BiSS-C	
Power Supply	5VDC(4.5-32VDC) or 12VDC (4.5-32VDC) or 24VDC (4.5-32VDC)	VDC
Current Consumption	<100 (typically <75 and does not change significantly with voltage supply)	milliAmp
Reverse Polarity	PSU Reverse polarity protected to max. supply voltage	VDC
Connector (ACx & RCx Product Options)	Harwin Data Mate Vertical Plug 10 Way with 2 Jack Screws Type M80-500-10-42 or M80-510-10-42 or M80-540-10-42	
Mating Connector (ACx & RFCx)	Harwin Data Mate Vertical Socket Type M80-461-10-42 (alternative M80-461-10-05)	
Zero Setting	Via Connector Pin or Integral Cable - see details for set and reset in relevant Section for Connector, Cable or Comms Interface	
Power Up Time To 1st Measurement	<150	millisecond

Measurement & Electrical Data for A/B/Z Pulses Comms Interfaces - Product Option ABZ1-6

	INC-x-58	
Measurement	Incremental with reference mark. Position of reference mark programmable by user.	
Resolution	As above - resolution defined as one edge of A/B pulse train	
Repeatability	+/-1	count
Static Accuracy over 360°	≤150arc-seconds or 0.73milliradians	
Internal Position Update Period	<0.1	millisecond
Thermal Drift Coefficient	≤1	ppm/K Full-Scale
Max. Speed for Angle Measurement	10 to 16bits = 7200r.p.m. 17bits = 3600r.p.m.	
Data Outputs	A/B pulses with Z pulse ref. Z position settable from connector/cable. Z pulse width selectable by Product Option/ Part Number.	
Power Supply	5VDC±10% or 12VDC (8-32VDC) or 24VDC (8-32VDC)	VDC
Current Consumption	<150 (does not vary significantly with supply voltage)	milliAmp
Reverse Polarity	PSU Reverse polarity protected to max. supply voltage	VDC
Connector (ACx & RFCx Product Options)	As above - resolution defined as one edge of A/B pulse train	
Mating Connector (ACx & RFCx)	Harwin Data Mate Vertical Socket Type M80-461-10-42 (alternative M80-461-10-05)	
Z Position Setting	Via Connector Pin or Integral Cable - see details for set and reset in relevant Section for Connector, Cable or Comms Interface	
Power Up Time To 1st Measurement	<120	millisecond

4.10 Environmental & Further Data (58mm)

Environmental Data

INC-x-58		
Operating Temp.	Minus 45 to +85 Minus 60 to +85Celsius for 12VCT & 24VCT Product Option. Minus45 to +105Celsius max. for 5HT Product Option Operation outside limits to be qualified by user. For operations below minus 60 Celsius: contact Celera Motion or local representative	Celsius
Storage Temp.	Minus 55 to +125 (Minus 60 to +125 for 24CT Product Option)	Celsius
Temperature Shock	MIL-STD-810G, Method 503.5, Procedure I-B (T1=-40 °C, T2=55 °C.)	
IP Rating - Rotor & Stator	IP67 for <60 minutes & 1m depth (Installed with mechanically protected connector or AFL1-5 or VFL1-5 Product Options) IP68 100m depth (Installed with mechanically protected connector or AFL2-52 or VFL2-52 Product Option) For immersion at depths of >100m select Extended Range High Pressure Option	
IP Rating - Connector	IP50 (ACx or RCx Product Option). See Section 4.7 for IP rating of AFLx & VFLx Product Option	
Humidity	RH 0-99% standard. Select Extended Range Option C & appropriate connector for condensing humidity or long term immersion	
Salt Fog	(Installed with protected cable/connector or any integral axial cable) Complies with DEF STAN 00-35 Pt. 3 Iss. 4, Test CN2 Salt Mist Test. Select Extended Range Option C and appropriate connector for environments with significant exposure to salt fog	
Bio Hazards	(Installed with protected cable/connector or any integral axial cable) Complies with DEF-STAN 00-35 Pt. 4 Iss. 4 Section 11 (Hazards)	
Induced Dust & Sand	Complies with DEF STAN 00-35 Pt 3 Iss 4, Test CL25 (Turbulent Dust) Cat 1. Select Extended Range Option C and appropriate connector for environments with abrasive dust or sand.	
Mechanical Impact Resistance	IK07 - when installed - *suitable for mechanical impacts from objects of >200grams from 1m height*	
Shock	IEC 60068-2-27 100g for 11ms - axial & radial - *suitable for most airborne, marine & armoured vehicles* MIL-STD-810G, Method 516.6, Procedure I-Functional Shock - axial and radial - 40 g 11 ms, sawtooth waveform For more extreme or prolonged conditions specify Extended Product Option G & preferably Integral Axial Cable	
Vibration	IEC 60068-2-6 20g for 10-2000Hz - axial and radial - *suitable for most high vibration & airborne environments* MIL-STD-810G, Method 514.6, Procedure I - axial and radial - Category 20, for tracked vehicles For more extreme or prolonged conditions specify Extended Product Option G and preferably Integral Axial Cable	
Environmental pressure range	0 to 7 *(i.e. vacuum to 7). See Extended Product Range High Pressure Option for higher operating pressures*	Bar
Max. permissible press. change rate	1	Bar/second
EMC Radiated Susceptibility	(Installed) Complies with IEC 61000-6-2 - *suitable for fitment in harsh EMC environments*	
EMC Radiated Emissions	(Installed) Complies with IEC 61000-6-4 - *suitable for fitment adjacent to EMI sensitive devices*	
Materials - all Product Options		
Rotor & Stator Housings	Standard range:- Al. alloy (6061-T6 or 6084-T6) with SurTec650. Sensor surfaces: FR4 grade epoxy Product Option A or S:- Alocrom finish al. alloy (6061-T6 or 6084-T6). Sensor surfaces: FR4 grade epoxy	
Connector (ACx or RCx Product Option)	PPS with Stainless Steel Screw Fixings and Gold & Tin Electrical Connections	
Miscellaneous - all Product Options		
Mass Shaft Clamp Rotor (max.)	43	grams
Mass Plain Rotor (max.)	32	grams
Mass Servo Clamp Stator (AC1)	43	grams
Mom. of Inertia Shaft Clamp Rotor (max.)	2.0E-05	Kgm^2
Mom. of Inertia Plain Rotor (max.)	1.8E-05	Kgm^2
MTBF	0.22 failures per 1M hours based on MIL-HBK-217+ method for ground military vehicles at 20Celsius average	
MTBF	0.35 failures per 1M hours based on MIL-HBK-217+ method for naval sheltered at 35Celsius average	
Hazardous materials	Standard range - Hazardous materials not used. RoHS compliant. RoHS certificate available. REACH statement available.	
Outgassing materials	Complies with NASA class'n as low outgas matl. with TML <1% & CVCM <0.1% at 125C & 24hrs vacuum to ASTM E-595-90	
ITAR classification	Not ITAR controlled. No ITAR components	
Approvals	Flammability Rating UL94V-0. Standard range - RoHS compliant - RoHS certificate available. REACH statement available.	
Marking	Zettlex, logo, CE & UL94V-0 printed on Rotor & Stator faces; Serial No. labelled on exterior diameter of Stator housing Extended Product Range Option E - engraved serial number and part number on exterior faces of Stator & Rotor	
Country of Manufacture	UK	
Export Licence Requirements	Not required for products of <1000mm diameter	

4.11 Measurement, Electrical & Environmental Data (37mm)

Measurement, Electrical, Environmental & Material Data for 37mm IncOder

Measurement		
Measurement	Absolute over 360°. Note this is true absolute - no motion required at start up	
Resolution (101001 Product Option)	10bits 1,024counts per rev 1265.6arc-secs 6144micro-rads	
Resolution (121001 Product Option)	12bits 4,096counts per rev 316.4arc-secs 1536micro-rads	
Resolution (141001 Product Option)	14bits 16,384counts per rev 79.1arc-secs 384micro-rads	
Resolution (161001 Product Option)	16bits 65,536counts per rev 19.77arc-secs 96micro-rads	
Resolution (171001 Product Option)	17bits 131,072counts per rev 2.47arc-secs 12micro-rads	
Repeatability	+/-1	count
Static Accuracy over 360°	≤353arc-seconds or ≤1.71milliradians	
Internal Position Update Period	<0.1	millisecond
Thermal Drift Coefficient	≤1.0	ppm/K Full-Scale
Max. Speed for Angle Measurement	10,000	r.p.m.
Max. Physical Speed	10,000	r.p.m.
Electrical		
Data Outputs	RS422 Compatible, supports SSI (Serial Synchronous Interface), asynchronous serial interface (ASI), SPI or BiSS-C.	
Power Supply	5VDC (4.5-8VDC) or 12VDC (4.5-14VDC)	VDC
Current Consumption	<100 (typically <75 and does not change significantly with voltage supply)	milliAmp
Reverse Polarity	PSU Reverse polarity protected to max. supply voltage	VDC
Zero Setting	Zero Set or Reset to factory value via Electronics Module - Section 7.1	
Power Up Time To 1st Measurement	<75	millisecond
Environment		
Operating Temp.	Minus 45 to +85 (+65 at >8VDC power supply) Operation outside limits to be qualified by user. At temperatures >85Celsius, duration should be minimized. Options available below minus 60 Celsius operation: contact Celera Motion or local representative for details	Celsius
Storage Temp.	Minus 55 to +125	Celsius
Temperature Shock	MIL-STD-810G, Method 503.5, Procedure I-B (T1=-40 °C, T2=55 °C.)	
IP Rating - Rotor & Stator	IP67 for <60 minutes & 1m depth	
Humidity	RH 0-99% non-condensing - *but unaffected by occasional condensation*	
Salt Fog	Complies with DEF STAN 00-35 Pt. 3 Iss. 4, Test CN2 Salt Mist Test	
Bio Hazards	Complies with DEF-STAN 00-35 Pt. 4 Iss. 4 Section 11 (Hazards)	
Induced Dust & Sand	Complies with DEF STAN 00-35 Part 3 Issue 4, Test CL25 (Turbulent Dust) Cat 1	
Shock	IEC 60068-2-27 100g for 11ms - axial & radial - *suitable for most airborne, marine & armoured vehicles* MIL-STD-810G, Method 516.6, Procedure I-Functional Shock - axial and radial - 40 g 11 ms, sawtooth waveform	
Vibration	IEC 60068-2-6 20g for 10-2000Hz - axial and radial - *suitable for most high vibration & airborne environments* MIL-STD-810G, Method 514.6, Procedure I - axial and radial - Category 20, for tracked vehicles	
Environmental pressure range	0 to 4 *(in other words vacuum to 4)*	Bar
Max. permissible press. change rate	1	Bar/second
EMC Radiated Susceptibility	(Installed) Complies with IEC 61000-6-2 - *suitable for fitment in harsh EMC environments*	
EMC Radiated Emissions	(Installed) Complies with IEC 61000-6-4 - *suitable for fitment adjacent to EMI sensitive devices*	
Miscellaneous		
Mass Set-Screw Rotor (max.)	10 (for 8mm bore)	grams
Mass Plain Rotor (max.)	7 (for 8mm bore)	grams
Mass Screw Mount Stator (max.)	20 (for 8mm bore)	grams
Mass E-Module in Housing	25	grams
MTBF	0.22 failures per 1M hours based on MIL-HBK-217+ method for ground military vehicles at 20Celsius average	
MTBF	0.35 failures per 1M hours based on MIL-HBK-217+ method for naval sheltered at 35Celsius average	
Hazardous materials	Standard range - Hazardous materials not used. RoHS compliant. RoHS certificate available. REACH statement available.	
Outgassing materials	Complies with NASA class'n as low outgas matl. with TML <1% & CVCM <0.1% at 125C & 24hrs in vacuum to ASTM E-595-90	
ITAR classification	Not ITAR controlled. No ITAR components.	
Approvals	Flammability Rating UL94V-0. Standard range - RoHS compliant - RoHS certificate available. REACH statement available.	
Marking	Zettlex, logo, CE & UL94V-0 printed on Rotor & Stator faces; Serial Number label. Extended Product Range Option E - engraved serial number and part number on exterior faces of Stator & Rotor	
Country of Manufacture	UK	
Export Licence Requirements	Not required for products of <1000mm diameter	

5. Customised Products

Celera Motion often modify IncOders to specific OEM requirements. Potential changes include :-

- size, mechanical mounts and housing materials
- voltage supplies & electrical outputs
- measurement performance
- connectors, cables & immersion protection
- temperature range – notably to -100Celsius and below
- low weight or low inertia.

Consult Celera Motion or your local representative for further information. Typically, customised products are an economical option in volumes of >200 units/year. Engineering/tooling charges may apply depending on order quantity. Some examples and guidance on suitable dimensions are shown below.

Ultra lightweight (13gram) miniature unit.

Custom housing with chromate surface finish & integral cable for remotely controlled gimbal.

Compact unit for high shock & vibration environment with integral cable.

Electrically duplex lightweight encoder with collar clamp.

To minimise tooling charges, the OD of Stator & Rotor should preferably be based on a standard size with a corresponding ID. For 37 or 58mm nominal devices, should not be less than the dimensions shown below:-

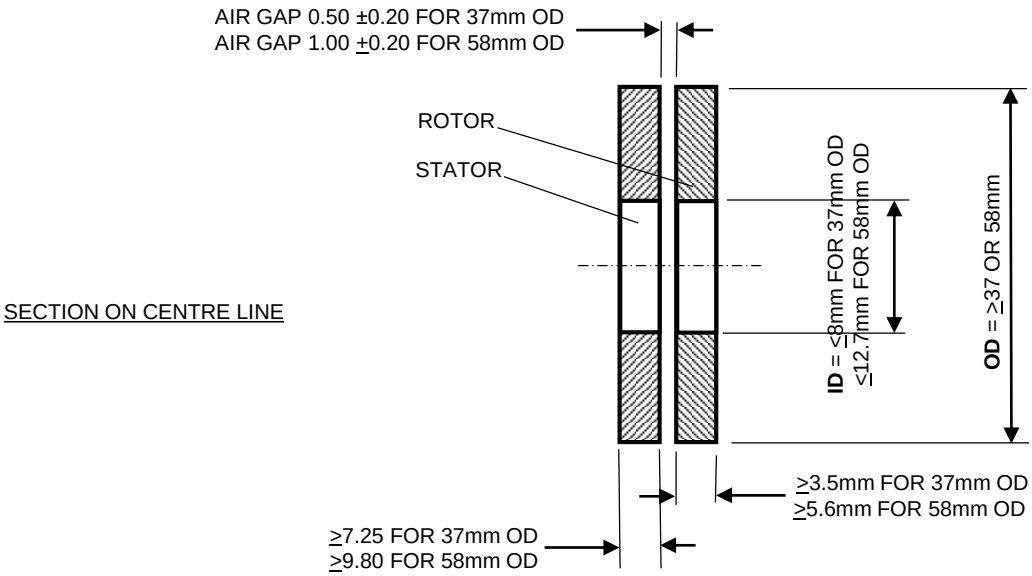

The IncOder range offers 5 different Communication Interfaces:-

- Synchronous Serial Interface – see Section 6.4 (Product Options SSI1-9)
- Asynchronous Serial Interface – see Section 6.5 (Product Option ASI1)
- Serial Peripheral Interface – see Section 6.6 (Product Option SPI1)
- A/B/Z pulses – see Section 6.7 (Product Option ABZ1 etc.)
- BiSS-C – see Section 6.8 (Product Options BIS1-3)

All digital Communications Interfaces conform to the RS422 Standard. Note that for all Communications Interfaces, DATA & CLOCK inputs are not terminated with load resistors.

6.1 Output Resolution

The IncOder range offers various Options for the resolution of the output data. The required digital resolution is simply specified using the relevant Product Option – see Section 8.

INC - X – XXX – XXXXXX – XXXX – XXXX – X – XXX

Resolution measured in bits.

10 Bits **101001**
11 Bits **111001**
12 Bits **121001**
13 Bits **131001**
14 Bits **141001**
15 Bits **151001**
16 Bits **161001**
17 Bits **171001**

Alternatively, for ABZ pulse output only, specify number of pulses per rev up to a max of 32,768 e.g. **P32678**

6.2 Multi-Turn or Single Turn

The default electrical output from an IncOder is over 1 rev. For multi-turn devices please contact Celera Motion or your local rep.

6.3 Zero Point Set & Reset for Digital Outputs Product Options - SSI1-9, SPI1, ASI1-2, BIS1-3

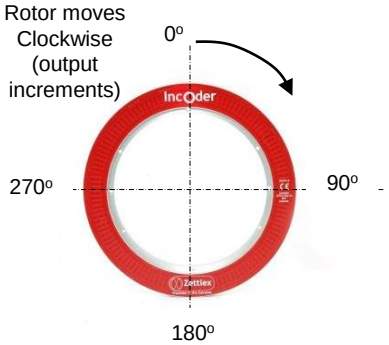

View on Stator Sensing Face

The Zero Point is the datum from which angle is measured. As supplied, the IncOder carries a factory Zero Point setting. The Zero Point is very roughly at 12 o'clock (near the 'O' of the printed 'IncOder'). The Zero Point can be changed using the Zero Set and Zero Reset lines on the IncOder's electrical interface. The Zero Set signal will set the current IncOder position as the Zero Point (held in memory when power removed). Zero Reset signal will reset the Zero Point to the factory setting (held in memory when power removed). To use, the relevant connection should be connected to electrical ground (<0.5V) for 5 seconds at power up but left unconnected (i.e. open circuit) during operation. (For 37mm see Section 7.1)

6.4 Synchronous Serial Interface (SSI) – Product Options SSI1-SSI9

6.4.1 Generic Protocol Definition– Product Options SSI1-SSI9

SSI is a widely used serial interface between position sensors and controllers. It is based on the RS-422 hardware standard and implements a differential output for the DATA and a differential input for the CLOCK. (Note that DATA outputs and CLOCK inputs are not terminated with load resistors.)

Synchronous SSI uses a clock sequence from a controller to initiate the transmission of position data from the sensor (a Read Cycle), with the latest position data (see Sections 4.9 & 4.11 for internal position update rate) available for transmission after each SSI Read Cycle is completed. See timing information below:-

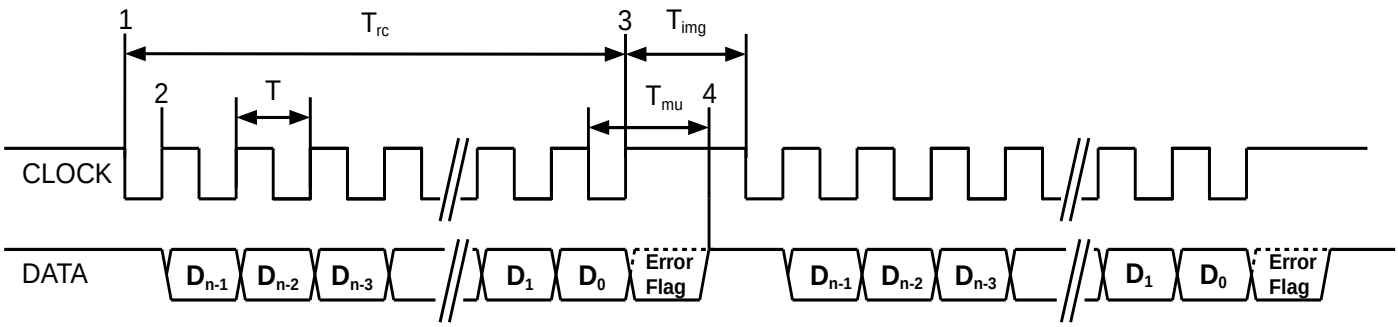

T: Clock Period (1/T = 100 kHz to 2 MHz)
Trc: Read Cycle time: This is defined as (n x T) + (0.5 x T)
Tmu: Message Update time. The time from last falling edge of clock to when new data is ready for transmission.
Tmu = 20us +/- 1 us. The DATA line will be HIGH after this time indicating a new Read Cycle can be started.
Timg: Intermessage Gap time. Must be > Tmu otherwise position data will be indeterminate.
n: The number of bits in the message (not including the Error Flag).
In idle state CLOCK and DATA are both HIGH

Notes:
1. The first falling edge after Tmu starts the Read Cycle and the transfer of data.
2. Each rising edge of the CLOCK transmits the next data bit of the message, starting with Dn-1.
3. After the last rising edge of the clock sequence, the data line is set by the Error Flag (if supported) for the period Tmu – 0.5xT.
4. After Tmu, the latest position data is now available for transmission in the next Read Cycle – see Sections 4.9 & 4.11 for position update rate.

6.4.2 SSI – Protocol Definition Product Options SSI1-SSI9

SSI can support a variety of protocols in which data is transmitted depending on the requirements of the SSI controller. **IncOder can be supplied with any of the following protocols – just choose what you need by using the relevant Product Option when ordering (see Section 8)**. If the protocol you require is not listed here then please consult Celera Motion or your local representative.

Most popular choice

SSI1 (n = 24)

D23	PV	Position Valid Flag. Set to 1 when data is valid, otherwise 0 (the inverse of the ERROR FLAG).
D22	ZPD	Zero Point Default. Set to 1 when the Zero Point is at Factory Default, otherwise 0
D21-D0	PD[21:0]	Binary position data. If resolution of device is less than 22 bits, then the MSBs of this field are set to 0. The LSB of this field is in D0. When PV is 0, PD[21:0] value is not defined.

SSI2 (n = 24)

D23-D2	PD[21:0]	Binary position data. If resolution of device is less than 22 bits, then the MSBs of this field are set to 0. The LSB of this field is in D2. When Alarm bit is 1, PD[21:0] value is not defined.
D1	P	Parity Bit 0 indicates an even number of 1's in data (D23-D2), 1 indicates an odd number of 1's in data.
D0	A	Alarm Bit – 0 indicates normal operation, 1 indicates error condition.

SSI3 (n = 16)

D15-D0	PD[15:0]	Binary position data. When ERROR FLAG is 1, PD[15:0] value is not defined.

Note: the use of SSI3 limits the measurement resolution to a maximum of 16bits.

SSI4 (n = 32)

D31	PV	Position Valid Flag. Set to 1 when position data valid, otherwise 0 (inverse of ERROR FLAG).
D30	ZPD	Zero Point Default. Set to 1 when the Zero Point is at Factory Default, otherwise 0.
D29-D11	PD[18:0]	Binary position data. If resolution of device is less than 19 bits, then the MSBs of this field are set to 0. The LSB of this field is in D11. When PV is 0, PD[18:0] value is not defined.
D10-D0	TS[10:0]	Time stamp data. The value of the Time Stamp counter when the position was measured. This data is always valid. The Time Stamp counter is a continuously incrementing counter in the range: 0.00ms to 20.47ms (at which point it restarts at 0.00ms). It has a resolution of 10us, with an accuracy better than 1% (based on the system oscillator).

SSI5 (n = 16)

D15-D0	PD[15:0]	Gray code, position data. When ERROR FLAG is 1, PD[15:0] value is not defined.

Note: the use of SSI5 limits the measurement resolution to a maximum of 16bits.

SSI6 (n = 32)

D31-D24	CRC[7:0]	CRC-8: To verify transmission, calculate the CRC of the bottom 24 bits of the message. The resulting CRC should be the same as the received CRC field. The following parameters define CRC-8: Polynomial 0x97 Initial data 0x00 MSB First (not reversed) No final XOR calculation.
D23	PV	Position Valid Flag. Set to 1 when position data is valid, otherwise 0 (the inverse of the ERROR FLAG).
D22	ZPD	Zero Point Default. Set to 1 when the Zero Point is at Factory Default, otherwise 0.
D21-D0	PD[21:0]	Binary position data. If resolution of device is less than 22 bits, then the MSBs of this field are set to 0. The LSB of this filed is in D0. When PV is 0, PD[21:0] value is not defined.

SSI7 (n = 30)

D29-D24	-	Data always 0.
D23-D2	PD[21:0]	Binary position data. If resolution of device is less than 22 bits, then the MSBs of this field are set to 0. The LSB of this field is in D2. When Alarm bit is 1, PD[21:0] value is not defined.
D1	P	Parity Bit 0 indicates an even number of 1's in data (D23-D2) 1 indicates an odd number of 1's in data.
D0	A	Alarm Bit – 0 indicates normal operation, 1 indicates error condition.

SSI8 (n = 18)

D17-D0	PD[17:0]	Gray code, position data. When ERROR FLAG is 1, PD[17:0] value is not defined.

SSI9 (n = 32)

D31	PV	Position Valid Flag. Set to 1 when position data valid, otherwise 0 (inverse of ERROR FLAG).
D30	ZPD	Zero Point Default. Set to 1 when the Zero Point is at Factory Default, otherwise 0.
D29-D11	PD[18:0]	Binary position data. If resolution of device is <19bits, then the MSBs of this field are set to 0. The LSB of this field is in D11. When PV is 0, PD[18:0] value is not defined.
D10-D0	TS[10:0]	Time stamp data. The value of the Time Stamp counter when the position was measured. This data is always valid. The Time Stamp counter is a continuously incrementing counter in the range: 0.00ms to 2.047ms (at which point it restarts at 0.00ms). It has a resolution of 1us, with an accuracy better than 1% (based on the system oscillator).

6.5 Asynchronous Serial Interface Protocol – Product Options ASI1 & ASI2

This section describes the communications interface for IncOders with ASI1 or ASI2 serial protocols. Data is transmitted by the IncOder continuously formatted into Frames. Each Frame consists of a number of 8 bit data words. Each 8 Bit data word (or byte) is transmitted from a standard UART using N-8-1 (no parity, 8 data bits, 1 stop bit). ASI1 has a Baud rate of 230400 and ASI2 has a Baud rate of 921600. See below for the data format of each transmitted data word. The Frames are transmitted at a rate of 10kHz nominal (same rate as Internal Position Update Period).

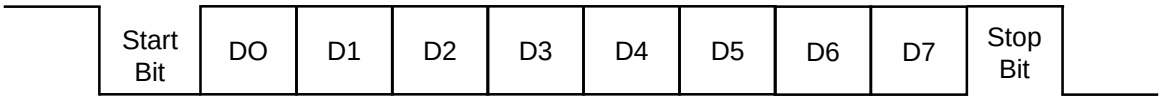

The following is the Asynchronous Serial Data protocol specified with the ASI1 or ASI2 Product Option. Each frame is defined as 6 bytes and the data format is defined as follows:

First byte (transmitted first):

D7	D6	D5	D4	D3	D2	D1	DO
1	PV	ZPD	0	0	PD[21:19]		

D7	D6	D5	D4	D3	D2	D1	DO
0	PD[18:12]						

D7	D6	D5	D4	D3	D2	D1	DO
0	PD[11:5]						

D7	D6	D5	D4	D3	D2	D1	DO
0	PD[4:0]					CRC[15:14]	

D7	D6	D5	D4	D3	D2	D1	DO
0	CRC[13:7]						

D7	D6	D5	D4	D3	D2	D1	DO
0	CRC[6:0]						

Data Definition for Asynchronous Serial Interface

PV	Position Valid flag. Set to 1 when data is valid, otherwise set to 0
ZPD	Zero Point Default. Set to 1 when the Zero Point is at Factory Default, otherwise set to 0.
PD[21:0]	IncOder Position Data. If resolution of device is less than 22 bits then the MSBs of this field are set to 0.
	When PV is 0, PD[21:0] value is not defined.
CRC[15:0]	CRC-16: To verify transmission, calculate the CRC of all 48 bits of the message but with CRC[15:0] set to 0.
	The resulting 16 bit CRC result should be the same as the received CRC[15:0].
	Use the following CRC-16 parameters:
	Polynomial 0x8005
	Initial data 0x0000
	MSB first (not reversed)
	No final XOR calculation.

6.6 Serial Peripheral Interface Protocol Definition – Product Option SPI1

This section describes the communications interface for IncOders with SPI1 (Serial Peripheral Interface) serial protocol. SPI is a widely used serial interface between micro processors/controllers and peripherals. SPI uses a clock sequence from a master to control the transmission of data from the IncOder. IncOders with SPI data interface conform to the RS422 hardware specification.

Note that the DATA outputs and the CLOCK inputs are not terminated with load resistors.

The following section defines the communication protocol.

The IncOder protocol specifies that each data frame consists of 6 bytes of data (each of 8 bits, 48 bits in total) containing the position, status flags and CRC (see timing diagram on the following page).

SPI Clock Polarity is defined so that the CLOCK idle state is HIGH and the Clock Phase is defined so that the data is captured on the falling edge of CLOCK, and the data is propagated on the rising edge of CLOCK. This is commonly depicted as CPOL=1, CPHA=0 (also depicted as UCCKPL=1, UCCKPH=1).

Clock rate is 100kHz to 5MHz.

Data Definition for IncOder SPI Protocol

D47-D33	SBZ	These bits will always be Zero.
D32	ZPD	Zero Point Default flag. Set to 1 when the Zero Point is at Factory Default, otherwise 0.
D31	PV	Position Valid Flag. Set to 1 when position data is valid, otherwise 0.
D30	PS	Position Synchronised flag. Set to 1 when the position measurement was triggered by a previous SPI Frame. Set to 0 when the position measurement was triggered by a Measurement Time-out (see note 3 overleaf). Use this flag to ensure that the IncOder has synchronised position measurements to the SPI Frames (Case 1, overleaf).
D29-D8	PD[21:0]	Binary position data. If resolution of device is less than 22 bits, then the most significant bits of this field are set to 0. The LSB of this field is in D0. When PV is 0, PD[21:0] value is not defined.
D7	SD	Stale Data flag. Set to 1 when the position data has been transmitted at least once before. Set to 0 when the position data has not been transmitted before. Use this flag to detect when a new measurement has been completed (Case 2, overleaf).
D6-D0	CRC[6:0]	Cyclic Redundancy Checksum. 7 Bit CRC: Polynomial 0x5B, Initial data 0x0000, MSB first (not reversed), No Final XOR. Note – the CRC is generated from bits D7 through D32. It is calculated using a 32 bit word (or 4 bytes) with D7 shifted in to the Least Significant Bit and the 6 Most Significant Bits set to ‘0’ as required.

6.6 Serial Peripheral Interface Protocol Definition – Product Option SPI1

SPI Timing information

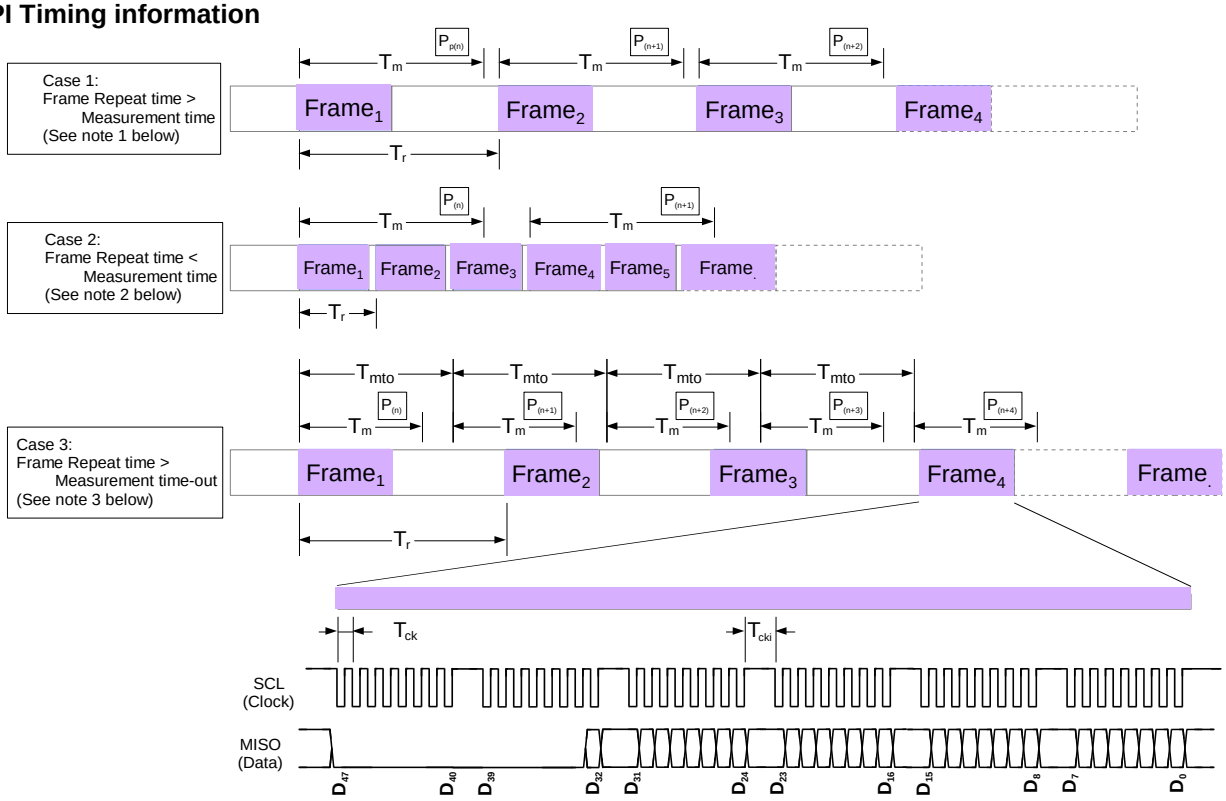

Timings determined by the Controller (SPI Master):

- T_{ck} Clock period (1/T = 100kHz to 5MHz).
- T_{cki} Clock Idle Period. Time between bytes during which CLOCK is idle. T_{cki} should be $<T_{ckimax}$ = 10µs
- T_r Frame Repetition period.

Timings defined by the IncOder (SPI Slave):

- T_m Position Measurement time. The time from the start of a position measurement to when the position and status is ready for transmission. 90µs ≤ T_m ≤ 95µs
- T_{mto} Position Measurement Time-out. The time after a position measurement has been triggered that the IncOder will automatically trigger a new measurement. 135µs ≤ T_{mto} ≤145µs.

Notes:

1. The IncOder will always attempt to trigger a new position measurement when a new SPI frame is started by the host. This will always be the case when T_r is greater than T_m and less than T_{mto}.
2. If a position measurement has already been triggered when a new SPI frame is started by the host, then a new position measurement will not be re-triggered. This may be the case when T_r is less than T_m
3. If the Host does not start a new SPI frame within time T_{mto} from the previous frame (the case when T_r is greater than T_{mto}), then the IncOder will automatically trigger a new position measurement.
4. In all cases, the IncOder will transmit the most recently completed measured position and status (see table below).
5. When CLOCK is idle for at least T_{ckimax}, then the IncOder SPI interface will reset. The first falling edge on CLOCK after T_{ckimax} will start the transmission of a new frame. This can be useful if the SPI host and slave (IncOder) lose Frame/Byte synchronisation (detected by invalid CRC).

Frame Number	Position transmitted (case 1)	Position transmitted (case 2)	Position transmitted (case 3)
Frame 1	$P_{(n-1)}$	$P_{(n-1)}$	$P_{(n-1)}$
Frame 2	$P_{(n)}$	$P_{(n-1)}$	$P_{(n)}$
Frame 3	$P_{(n+1)}$	$P_{(n-1)}$	$P_{(n+1)}$
Frame 4		$P_{(n)}$	$P_{(n+3)}$
Frame 5		$P_{(n)}$	

6.7 A/B/Z Pulse Interface
Product Options ABZ1 to ABZ6

IncOders with A/B/Z pulses are often used as velocity or brushless motor encoders. A/B/Z pulse IncOders provide cyclical outputs as the encoder rotates. Streams of pulses are arranged in phase quadrature for direction sensing. The Z-reference or 'index' pulse is triggered once per turn. There are 6 Product Options:-

Product Option ABZ1 - **RS422 with 90º width Z reference**
Product Option ABZ2 - **RS422 with 180º width Z reference**

Clockwise rotation of rotor when looking at Stator sensing face

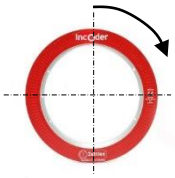

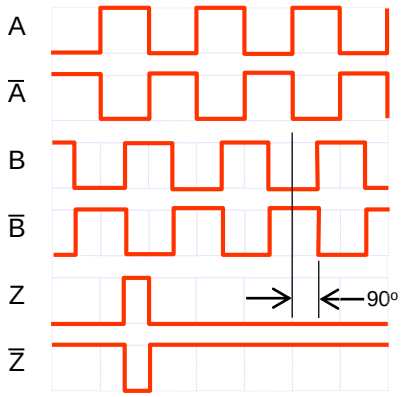

A leads B for clockwise rotation of rotor
Phasing: 90º electrical
Symmetry: 180º electrical
Max. pulse frequency: 2MHz
High signal: >2.5V
Low signal: <0.5V
Max. output load: 30mA
Diagram shows 90º width Z reference (ABZ1)

Product Option ABZ3 - **Push-Pull (TTL) with 90º width Z reference**
Product Option ABZ4 - **Push-Pull (TTL) with 180º width Z reference**
Product Option ABZ5 - **Push-Pull (HTL) with 90º width Z reference**
Product Option ABZ6 - Push-Pull (HTL) with 180º width Z reference
Push-Pull devices may be run in antivalent mode (shown above) or single ended mode (shown below).

Clockwise rotation of rotor when looking at Stator sensing face

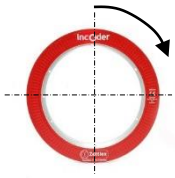

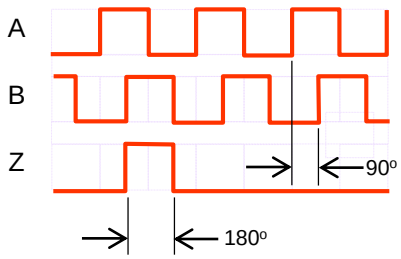

A leads B for clockwise rotation of rotor
Phasing: 90º electrical
Symmetry: 180º electrical
Max. pulse frequency: 2MHz
High signal: >Vsupply – 2V (HTL) or >4.5V (TTL)
Low signal: <0.2V
Max. current: 30mA
Diagram shows 180º width Z reference (ABZ4 or 6)

Note: 1 edge = 1 count or 1 bit. 4 counts per pulse. Readers should be set to 4x resolution for full resolution.

Z Reference Position : The factory set Z Reference Position is at +/-5º of the Rotor and Stator dowel positions at 12 o'clock (near the 'O' of the printed 'IncOder'). Z Reference Position may be changed using the Z Set or Z Reset lines on the IncOder's electrical interface (see Section 4.7 or 7.0).

Setting Z Reference Position: Z Set signal sets the current position as Z Reference Position. This is held in memory when power removed. Z Reset signal will reset the Z Reference Position to factory setting (held in memory when power removed). To use, the relevant connection should be connected to electrical ground (<0.5V) for at least 1 second at power up but left unconnected (i.e. open circuit) during normal operation (see Section 4.7 or 7.0).

Error Signalling: IncOders carry out various self checks. If an error is detected then an error signal is generated. This is shown by all outputs going to low signal (including differential outputs).

Counts per rev (CPR) & Pulses per rev(PPR): CPR may be chosen as any even integer number of bits up to 19 e.g.12 (4096CPR). PPR may be chosen up to 131,072. See Section 8 on how to select CPR or PPR from the part number. In part number, letter P in front of chosen pulses per rev indicates selection.

BiSS-C is a popular communications interface between controllers and position sensors. The IncOder BiSS-C interface is unidirectional and provides fast, compact, economic serial communications using RS422 (SSI) compatible hardware. The IncOder BiSS-C interface is a point to point configuration (a single device with a single slave), conforming to the requirements of BiSS-C Unidirectional. In this configuration, the IncOder is the only slave connected to the master (the host control system).

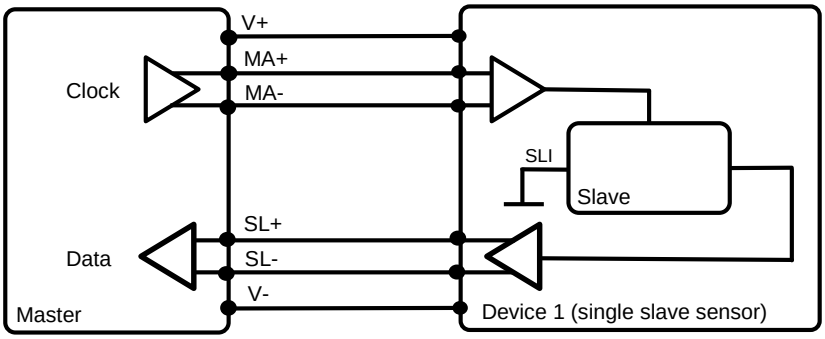

The Master transmits clock signals to the Slave via the MA line. The SL line carries the sensor data directly from the Slave back to the Master. The interface has only two unidirectional, differential lines (as the IncOder permanently connects the input SLI to '0'). Parameters for the individual data channels are specified below. These parameters can be pre-programmed in the controller and referenced via an ID or lookup table, or manually entered.

BiSS-C Timing Parameters

Symbol	Parameter	Min.	Max.	Unit
$1/T_{MA}$	Clock Frequency	600	2000	kHz
$T_{BISS\text{-}TIMEOUT}$	BiSS Timeout	15	20	micro-seconds

The IncOder implements a "pipelined" data output. The position (and status) returned in the SCD is from the reading triggered by the previous BiSS frame (provided that the frame repetition period conforms to the requirements described for the SPI protocols - see Section 6.6).

6.8.1 BiSS-C Protocol – Product Options BIS1-3

BIS1 IncOder protocol: BiSS-C Data Channel Parameters

Number of Bits (SCD length)	31 bits
Processing Time	12 Clock Cycles (12 x T_{MA} micro-seconds)
Data Area Length & Alignment	25Bits, Right Aligned
CRC	Width: 6Bits Polynomial: 0x43 Initial Value: 0x00 Output Inverted

Data Area Definition

MSB LSB

F2	F1	FO	D21	D20	D19	D18	….	D3	D2	D1	DO

F2: '1' = valid (the position reading is valid)
F1: '1' = zero position default (the zero position is set to the factory default value)
F0: '1' = sync (position data reading was synchronised to previous BiSS frame)
D21: Most significant bit of the position data (if IncOder resolution is <22Bits the MSBs are set to '0')
D0: Least significant bit of the position data.

BIS2 IncOder protocol: BiSS-C Data Channel Parameters

Number of Bits (SCD length)	30 bits
Processing Time	12 Clock Cycles (12 x T_{MA} micro-seconds)
Data Area Length & Alignment	24 Bits
CRC	Width: 6Bits Polynomial: 0x43 Initial Value: 0x00 Output Inverted

Data Area Definition

MSB											LSB
D21	D20	D19	D18	D17	….	D3	D2	D1	D0	nE	nW

D21: Most significant bit of the position data (if IncOder resolution is <22Bits the MSBs are set to '0')
D0: Least significant bit of the position data.
nE: '1' = position valid
nW: Always '1'

Example for 17 bit resolution:

MSB											LSB
0	0	0	0	0	D16	D15	….	D1	D0	nE	nW

BIS3 IncOder protocol: BiSS-C Data Channel Parameters

Number of Bits (SCD length)	30 bits
Processing Time	12 Clock Cycles (12 x T_{MA} micro-seconds)
Data Area Length & Alignment	24 Bits
CRC	Width: 6Bits Polynomial: 0x43 Initial Value: 0x00 Output Inverted

Data Area Definition

MSB											LSB
D21	D20	D19	D18	D17	….	D3	D2	D1	D0	nE	nW

D21: Most significant bit of the position data (if IncOder resolution is <22Bits the LSBs are set to '0')
D0: Least significant bit of the position data.
nE: '1' = position valid
nW: Always '1'

Example for 17 bit resolution:

MSB											LSB
D16	D15	D14	….	D1	D0	0	0	0	0	nE	nW

7. Connector Diagrams

Product Option AC1* + Digital Outputs
SSI1-9, ASI1-2, SPI1, BIS1-3

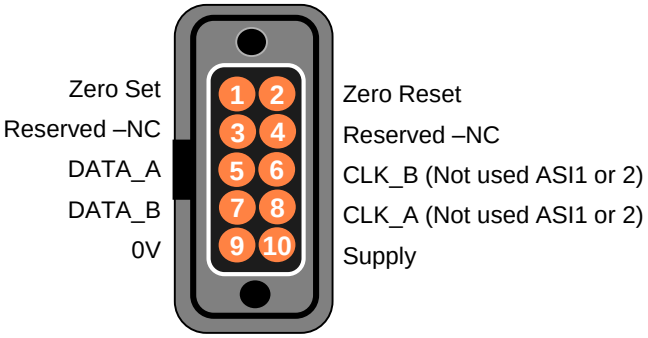

Product Option AC1* + A/B/Z Pulse Outputs ABZ1-6

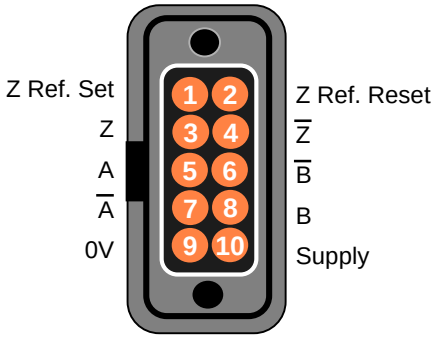

Notes:-
1. 27kOhm pull up resistors fitted to Zero Set, Span Set, Direction Set, Zero Reset & Reset inputs
2. Reserved pins are for factory use only and should be left open circuit

7.1 Connector Diagram & Zero Setting for 37mm

For compactness, the 37mm IncOder has a separate Electronics Module with integral cable, rather than a connector. The electrical connections are shown below:-

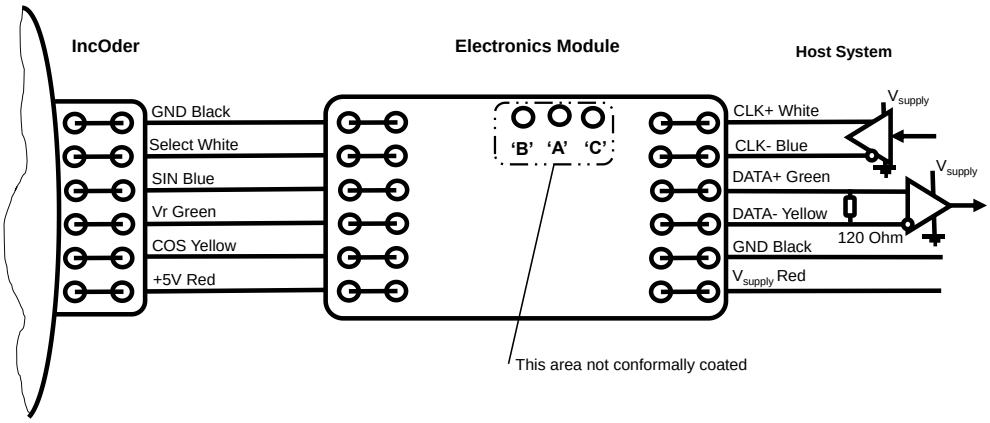

The Zero Point is the datum from which angle is measured. As supplied, the IncOder carries a factory Zero Point setting. The Zero Point can be changed using a Zero Set or Zero Reset function.

The Zero Set function will set the current IncOder position as the Zero Point (held in memory when power removed). This Zero Set function is carried out as an input to the Electronics Module. Inputs 'A' and 'B' (1mm diameter plated through holes identified on Electronics Module) should be electrically connected together for more than 1 second at power up (carried out manually using a wire jumper provided with each IncOder).

The Zero Reset signal will reset the Zero Point to the factory setting (held in memory when power removed). The Zero Reset function is carried out as an input to the Electronics Module. Inputs 'A' and 'C' (1mm diameter plated through holes identified on Electronics Module) should be electrically connected for more than 5 seconds at power up (carried out manually using a wire jumper provided with each IncOder).

8.1 Product Ordering (58mm)

INC - X – XX.XXX – XXXXXX – XXXX – XXXX – X – X

Mechanical Format

Servo Clamp Stator & Plain Rotor – **6**

Servo Clamp Stator & Shaft Clamp Rotor - **11**

Outer & Inner Diameter

58.060 58 & 06.0mm
58.100 58 & 10.0mm
58.120 58 & 12.0mm
58.127 58 & 12.7mm

Resolution

10 Bits **101001**
11 Bits **111001**
12 Bits **121001**
13 Bits **131001**
14 Bits **141001**
15 Bits **151001**
16 Bits **161001**
17 Bits **171001**
PPR (Note 3) **PXXXXXX**

Connector

AC1 axial connector direction 1
AC2 axial connector direction 2
RC1 radial connector direction 1
RC2 radial connector direction 2
AFL1 integral axial cable
AFL2 integral axial cable, sealed
AFL3 integral axial, high flex cable
AFL32 integral axial, high flex cable, sealed
AFL5 integral axial, PTFE / MIL spec cable
AFL52 integral axial, PTFE / MIL spec cable, sealed
VFL1 integral vertical cable
VFL2 integral vertical cable, sealed
VFL3 integral vertical, high flex cable
VFL32 integral vertical, high flex cable, sealed
VFL5 integral vert., PTFE / MIL spec cable
VFL52 integral vert., PTFE / MIL spec cable, sealed

Supply Voltage

5
5HT (Note 5)
12
12CT cold temp.
24
24CT cold temp.

Finish

S SurTec650

Communication Interfaces

ASI1 Asynch. Serial I/face 1
ASI2 Asynch. Serial I/face 2
SSI1 SSI Type 1
SSI2 SSI Type 2
SSI3 SSI Type 3 (Note 2)
SSI4 SSI Type 4 (Note 2)
SSI5 SSI Type 5 (Note 2)
SSI6 SSI Type 6
SSI7 SSI Type 7
SSI8 SSI Type 8 (Note 2)
SSI9 SSI Type 9 (Note 2)
SPI1 Serial Peripheral I/face
ABZ1 RS422 90º width Z
ABZ2 RS422 180º width Z
ABZ3 Push-Pull TTL 90º width Z
ABZ4 Push-Pull TTL 180º width Z
ABZ5 Push-Pull HTL 90º width Z
ABZ6 Push-Pull HTL 180º width Z
BIS1 BiSS-C Type 1
BIS2 BiSS-C Type 2
BIS3 BiSS-C Type 3

Notes:

1. 1 IncOder includes 1 Stator & 1 Rotor but excludes Accessories (e.g. Servo Clamps)
2. Maximum effective resolution limited by communications protocol – see Section 6.4.2
3. For ABZ pulse output only - if required resolution is not an integer bit value, specify even number of pulses per rev up to 32,768.
4. See section 4.8. for Extended Range Options. Note 58mm standard surface finish is SurTec650.
5. High Temperature Option only available with SSI1-9, SPI, ASI1-2, BIS1-3 Comms only.

8.2 Product Ordering (37mm)

INC - X – XX.XXX – XXXXXX – XXXXX – XXXX – XX – X

Mechanical Format

Servo Clamp Stator & Set Screw Rotor – **4**

Servo Clamp Stator & Plain Rotor – **6**

Screw Mount Stator & Set Screw Rotor – **7**

Screw Mount Stator & Plain Rotor – **8**

Outer & Inner Diameter

37.050 37 & 5.00mm
37.060 37 & 6.00mm
37.063 37 & 6.35mm
37.080 37 & 8.00mm

Resolution

09 Bits **091001**
10 Bits **101001**
11 Bits **111001**
12 Bits **121001**
13 Bits **131001**
14Bits **141001**
15 Bits **151001**
16 Bits **161001**
17 Bits **171001**

Communication Interfaces

ASI1 Asynchronous Serial Interface 1
ASI2 Asynchronous Serial Interface 2
SSI1 SSI Type 1
SSI2 SSI Type 2
SSI3 SSI Type 3 (Note 2)
SSI4 SSI Type 4 (Note 2)
SSI5 SSI Type 5 (Note 2)
SSI6 SSI Type 6
SSI7 SSI Type 7
SSI8 SSI Type 8 (Note 2)
SSI9 SSI Type 9 (Note 2)
SPI1 Serial Peripheral Interface
BIS1 BiSS-C Type 1
BIS2 BiSS-C Type 2
BIS3 BiSS-C Type 3

Connection

RC371 radial (250 + 250mm cable length)*
RC372 radial (250 + 2000mm cable length)*
RC373 RC371 + e-module housing
RC374 RC372 + e-module housing

**First length is cable length from Stator to Electronics Module*

Supply Voltage

5
12

Finish

S SurTec650

Notes:

1. Each 37mm IncOder includes 1 Stator & 1 Rotor & 1 Electronics Module and interconnecting cables but excludes Servo Clamps – which are sold separately – please see Section 9.
2. Maximum effective resolution limited by communications protocol – see Section 6.4.2.
3. Only a sub-group of Extended Product Range options apply to 37mm
   - **B** Extended thermal stress-screening (burn-in test) / bake-off
   - **E** Engraved serial number and part number on Stator & Rotor (rather than serial label)
   - **P** Use of leaded solder (rather than RoHS compliant solder)
   - **C** Prolonged immersion, salt spray or extreme dust option.

8.3 Product Ordering - General

If you have difficulty in specifying what you need, please contact Celera Motion or your local representative.

Here are some examples of part numbers:-

INC – 6 – 58.060 – 171001 – SSI1 – AC1 – 12 – S
Servo clamp stator & plain rotor, 58mm outer diameter, 6mm inner diameter, 17 bit resolution, SSI1, axial connector direction 1, 12V, SurTec650 surface finish.

INC – 4 – 37.050 – 171001 – ASI1 – RFC371 – 24 – S
Servo clamp stator & set-screw rotor, 37mm outer diameter, 5mm inner diameter, 17 bit resolution, asynchronous serial data, radial (250 + 250mm cable length), 24V, SurTec650 surface finish.

In the event that a custom or non-standard product is required, we will generate a part number accordingly – like the following example:-

INC – ACME – 58 – 141002 – X3601 – AB – 12CT – SBP
ACME custom design format, 58mm diameter, 14 bit resolution, data output over 2 revs, 0.5 to 5.0V over 360º clockwise, custom connector, 12V supply, cold temperature option, SurTec650 finish, Burn-in, leaded solder.

8.4 Product Ordering – Extended Range

For most applications Extended Product Range Options are not necessary. However, in those instances where these additional / alternative steps are mandatory or deemed necessary, please add the following Product Options to the end of the standard part number. One or more of Extended Product Range Codes may be added. Note that not all Extended Range Options apply to all sizes. Further, selection of any Extended Product Range Codes increase costs and lead-times and should only be specified if necessary.

- **B** Extended thermal stress-screening (burn-in test) / bake-off
- **E** Engraved serial number and part number on Stator & Rotor (rather than serial label)
- **G** Very high shock & vibration mechanical arrangement
- **P** Use of leaded solder (rather than RoHS compliant solder)
- **V** Option for high operating pressure
- **C** Conformally coated sensor faces

For cold temperature option (to -60ºC operating) select **12CT** or **24CT** in Supply Voltage Product Option.

For high temperature option (to 105ºC operating) select **5HT** in Supply Voltage Product Option.

Example of an extended part number:
INC – 7 – 37.080 – 171001 - ASI1 – RC371 – 12CT – SP
Screw mount stator & set-screw rotor, 37mm outer diameter, 8mm inner diameter, 17 bit resolution, asynchronous serial data, radial (250 + 250mm cable length), 12V supply (cold temperature), Surtec650 surface finish, leaded solder.

9.1 Standard Cable (8-way) & High Temperature Cable (8-way)

Mating connector and tinned wires on other end.
Use this for SSI1-9, SPI1, ASI1-2 & BiSS-C comms.
Use 10-way cable for A/B Pulse comms (see overleaf).

Standard Cable:-

Product Option INC – CAB3 – 2 (2m long)
Product Option INC – CAB3 – 5 (5m long)
Product Option INC – CAB3 – 10 (10m long)

High Temperature Cable:-

Product Option INC – CAB3 – 2 – HT (2m long)
Product Option INC – CAB3 – 5 – HT (5m long)
Product Option INC – CAB3 – 10 – HT (10m long)

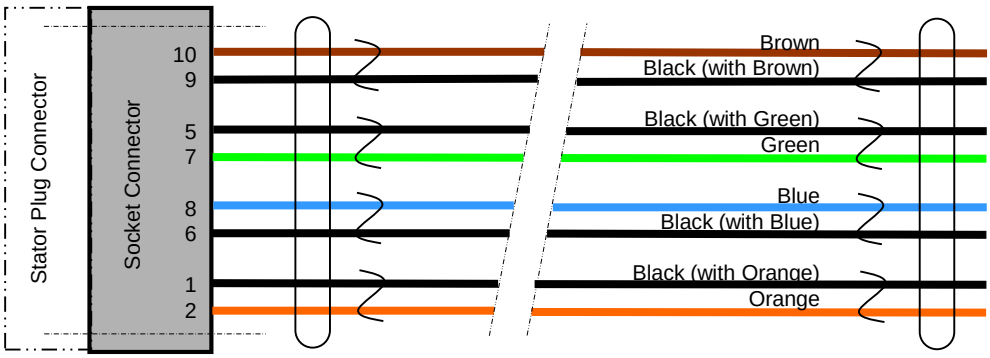

Pair No.	Colour	Connector Pin (For Info. Only)	Signal (SSI1- & SPI & BiSS-C)	Signal (ASI1-2)
1	Brown	10	V_{supply}	V_{supply}
1	Black	9	0V	0V
2	Black	5	Data A	Data A
2	Green	7	Data B	Data B
3	Blue	8	Clock A	Not Used
3	Black	6	Clock B	Not Used
4	Black	1	Zero Set	Zero Set
4	Orange	2	Zero Reset	Zero Reset

- Socket Connector: Harwin DataMate J-Tek 10-way with 2 jack screws, part number M80-461-10-42
- Temperature Rating = -30 to +80Celsius or 105Celsius for High Temp. option
- UL Temperature Rating 80Celsius (UL AWM Style 2464) or 105Celsius for High Temp. option
- Cable diameter = 6mm nominal
- Min. flexing rad. = 76mm with a 1-off bend radius (e.g. on installation) of 20mm
- Cable length = 2, 5 or 10m +/- 0,1m as standard
- Cable sheath & outer jacket = PVC for standard & PTFE for High Temp. option
- Conductors = 24 AWG multi-strand copper wires, twisted pairs, overall foil shield, tinned copper drain wire
- Conductor insulation = polyethylene for standard & PTFE for High Temp. option
- For integral axial cable (Product Option AFLx & VFLx) connection table see Section 4.7.

9.2 Standard Cable (10-way)

Mating connector and tinned wires on other end.
Use this cable for A/B pulse comms.

Product Option INC – CAB5 – 2 (2m long)
Product Option INC – CAB5 – 5 (5m long)
Product Option INC – CAB5 – 10 (10m long)

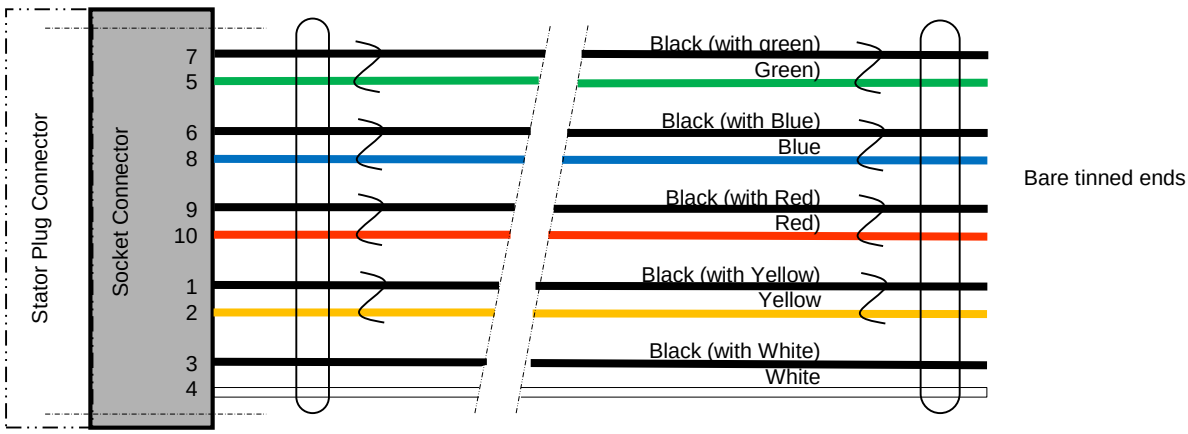

Notes

- Cable is 10-way, 24 AWG stranded (7x32) conductors, semi-rigid PVC external insulation & jacket, 5x twisted pairs, overall foil shield (100% cover), 24AWG stranded drain tinned copper drain wire.
- All other specification points as per Belden 9505
- Socket Connector: Harwin DataMate J-Tek 10-way with 2 jack screws, part number M80-461-10-42
- Temperature Rating = -30 to +80Celsius. UL Temperature Rating 80Celsius (UL AWM Style 2464)
- Diameter = 7.3mm
- Cable length = 2000 +/- 100mm as standard
- Min. flexing rad. = 76mm with a 1-off bend radius (e.g. on installation) of 20mm
- For integral axial cable (Product Option AFLx & VFLx) connection table see Section 4.7.

Pair No.	Colour	Connector Pin (For Info. Only)	Signal (A/B pulses & Z Ref.)
1	Black	7	A complement
1	Green	5	A
2	Black	6	B complement
2	Blue	8	B
3	Black	9	0V
3	Red	10	V_{supply}
4	Black	1	Z Ref Set
4	Yellow	2	Z Ref. Reset
5	Black	3	Z
5	White	4	Z complement

9.3 Servo Clamp – Part Number INC-CLAMP1

For use with Servo Clamp format Stators. Servo Clamps are sometimes referred to as ‘Clamp Cleats’ or ‘Screw Clamps’. Celera Motion recommends at least 3 Clamps on each Stator in M2.5 locations equispaced on a P.C.D. of IncOder dimension (**A** + 8.00). Supplied in a pack of 3.

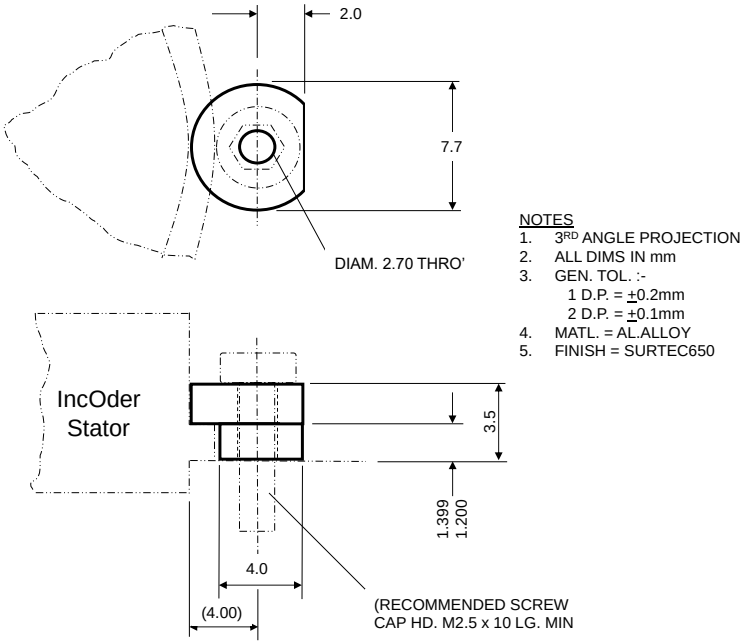

NOTES
1. 3RD ANGLE PROJECTION
2. ALL DIMS IN mm
3. GEN. TOL. :-
   1 D.P. = ±0.2mm
   2 D.P. = ±0.1mm
4. MATL. = AL.ALLOY
5. FINISH = SURTEC650

10.1. How do IncOders work?

IncOders work in a similar way to rotary variable transformers, brushless resolvers or synchros. The Stator receives DC power and produces a low power AC electromagnetic field between the Stator & Rotor. This field is modified by the Rotor depending on its angle. The Stator senses the resulting field and outputs the rotation angle as an analogue or digital signal. Unlike resolvers, IncOders use laminar circuits rather than wound wire spools. This technology enables IncOder's compact form, low mass, low inertia and high accuracy without high precision installation.

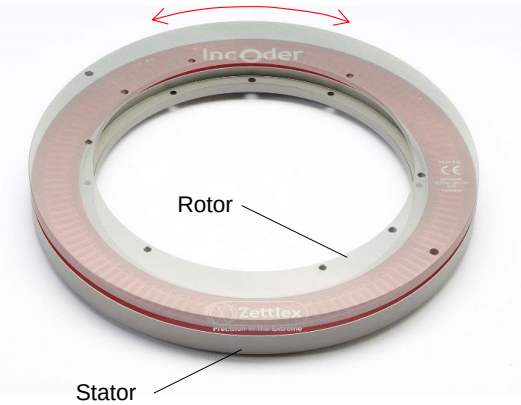

10.2. Is IncOder measurement truly absolute for absolute output devices?

Yes. Measurement will be the same before and after power interruption. No motion is needed at start up.

10.3. Does measurement performance vary with Rotor concentricity?

Resolution, repeatability & accuracy (linearity) will be as specified, provided Rotor concentricity is within specified limits. One might expect accuracy to degrade significantly with concentricity, but IncOders use the full faces of Rotor & Stator, so errors are nulled by diametrically opposing factors. This is different to other encoder technologies – notably optical or capacitive devices - where performance depends on tightly controlled concentricity.

10.4. Can IncOders be used outside the stated operating temperature limits?

Operating temperature limits are set by some of IncOder's electronic parts rather than the basic technique. Standard IncOders are rated -40 or 85ºC operation and with a cold option (Product Options 12VCT & 24VCT) for -60ºC operation. IncOders can be used outside these limits following qualification by the user. At temperatures >85ºC the duration of any elevated temperature should be minimized. At temperatures at or below the stated lower limit, it is recommended to leave the unit powered or allow an extended powered period (>1 minute) before operation.

10.5. What happens if the Rotor or Stator get wet or dirty?

Measurement performance is unaffected by humidity, condensation, dirt, dust, oil, mud or sand. All IncOders will survive temporary immersion to depths of 1m in salt or fresh water. Where frequent exposure to liquids, or immersion, is part of the operating environment, units with connections type AFL or VFL should be used.

10.6. How can an IncOder be calibrated?

Calibration is only relevant for some ultra high accuracy applications such as astronomical telescopes. Readings from an IncOder are stored and compared to a reference in a look-up table in the host system. Such an arrangement will negate any inaccuracy due to inherent non-linearity or installation tolerances. Resolution & repeatability are unaffected by calibration. For higher accuracy, please see IncOder Ultra Range.

10.7. At what Baud rate can the data interface operate at and does this effect cable length?.

The longer the transmission distance (Cable Length), the slower the recommended Baud Rate. This table shows recommended Baud Rates vs. Cable Length.

Baud Rates For Data Transmission				
Cable Length (m)	<30	<60	<120	<250
Baud Rate	<400 kHz	<300 kHz	<200kHz	<100 kHz

10.8. Are IncOders affected by magnets?

No. Magnets produce DC fields. IncOders use AC electro-magnetic fields at a highly specific frequency.

10.9. Are IncOders suitable for use in harsh electromagnetic fields?
Yes. Many IncOders are used near powerful sources of electromagnetic noise such as motors or transformers. IncOder's aluminium housing produces a Faraday cage effect around the internal electronics and the technology is designed so that incoming, far-field radiation is self cancelling or filtered out.

10.10. Do IncOders produce electromagnetic emissions?
Radiated emissions are tiny and limited to the IncOder's internal sensor faces. The IncOder housing has a Faraday cage effect. IncOders are often used in proximity to sensitive devices such as navigation aids.

10.11. What if we need to earth the IncOder casing?
Some applications such as fighting vehicles and aircraft require the IncOder casework to be electrically earthed. Some IncOder housing finishes are hard-anodized which is non-conductive. A connection can be made using an earth strap with a crinkle washer which penetrates the anodized surface. Alternatively, remove the anodized surface in the immediate vicinity of the strap (usually located using one of the attaching screws) using a file or abrasive. Alternatively, conductive finishes such as Surtec650 may be specified from the Extended Product Range (standard for 37 and 58mm products).

10.12. Does the Rotor need electrical earthing?
No. Some capacitive devices require the rotating shaft to be electrically connected to earth so as to avoid electrostatic interference. There is no such requirement with IncOder.

10.13. Does measurement performance vary with Rotor to Stator gap?
Resolution, repeatability & linearity will be as specified, provided gap is to specified tolerances. Within limits, the IncOder's measurement resolution & repeatability are independent of gap. If gap tolerance is increased from ±0.35mm to ±0.50mm the *guaranteed* measurement non-linearity will double. For example, if a 250mm IncOder has a gap tolerance of ±0.50mm (rather than the specified +0.35mm) the *guaranteed* linearity will increase from +/-40 arc-secs to +/-80 arc-secs. Gap tolerances are most easily achieved using Set Screw or Shaft Clamp Rotors.

10.14. Do IncOders carry out self checks or Built-In-Test (BIT)?
Yes. If BIT shows an internal error then an error signal is generated. The BITs include continuity/damage, presence of Rotor, in-range Rotor, gross electromagnetic malfunction, window watchdog timer, power on reset, power brownout reset, timeouts for clock input, read/write and internal flash data memory value checks.

10.15. Do IncOders outgas?
IncOder housings are hard-anodized or Surtec finished aluminium which produce no outgassing. The epoxies and other materials used inside the devices comply with NASA's classification of low outgassing materials for spacecraft with TML of <1% and CVM of <0,1% measured at 125°C over 24 hours in vacuum according to ASTM E-595-90. IncOders are successfully used with sensitive optical devices without residues from the IncOder affecting the lenses.

10.16. How can we specify a custom IncOder variant?
Use this document as a basis and specify any differences. Preferably, a standard outer diameter 'A' dimension (i.e. 37, 58, 75, 90mm etc.) and a proportionate inner diameter should be used. This enables us to use regular sensor components with an alternative mechanical format.

10.17. What's the largest IncOder you can build?
573mm outer diameter. Contact Celera Motion or your local representative for larger sizes.

10.18. Do IncOders require an Export License?
Not usually. IncOders are exempt from Annex I to Council Regulation (EC) No. 428/2009, as amended [EU Dual-Use List] and only require an export license if the diameter is greater than or equal to 1000mm or accuracy is <1arc-second. No standard products are in this class.

10.19. How does Celera Motion manage the obsolescence of electronic components?
Celera Motion has detailed obsolescence policies and procedures as part of our Quality Management System. Generally, our policy is only to use electronic components which are widely used; available from a variety of sources and have low likelihood of obsolescence. In the event of an electronic component becoming obsolete we typically select, specify and, if necessary, qualify a suitable form, fit & functional alternative.

10.20. Can IncOders be used submerged in oil or water?
Yes. All units can be used in mineral oil. Use integral axial cable connections (58mm only) for submersion in water together with Extended Range Product Option C. If submersion is at depth then also specify Extended Range Product Option C (58mm only). If necessary, contact Celera Motion for further information.

10.21. Does the accuracy of IncOders improve if the range is reduced?
Yes. Repeatability is unaffected but accuracy – in other words, linearity - improves as the range reduces. This can be advantageous in some applications where the range of motion is restricted, such as elevation controls in pointing devices which are often <90°. The following table shows the effect on quoted accuracy as scale reduces for all devices with a digital output:-

IncOder Size (mm)	Static accuracy. Ranges up to 360° arc-seconds	Static accuracy. Ranges up to 90° arc-seconds	Static accuracy. Ranges up to 60° arc-seconds	Static accuracy. Ranges up to 30° arc-seconds
37	353	268	184	141
58	150	132	93	77

The rate of improvement of static accuracy vs. range is not a simple linear function. This means that if your application's range is say 120° the quoted accuracy should be taken from the column 'up to 360°'. Similarly if your range is 45° the quoted accuracy should be taken from the column 'up to 60°'. For clarity, the above applies to all IncOders not just customised products with reduced scale.

10.22. Can we accurately calculate speed using an IncOder?
Yes. There are various approaches and the optimal approach depends on the nature of your application and how accurately speed is to be measured. Generally, 0-10V output IncOders are not suitable for speed calculation because they are typically only suitable for <1 revolution operation rather than continuous rotation. The first option is to use an IncOder with A/B pulses. The second option is to use a Duplex IncOder (INC-10) with an A/B pulse inner and an absolute angle outer. The third option is to use a device with an absolute angle output such as SPI or SSI, and where SPI1 or SSI4 product options are particularly advantageous. The approach for this third option is detailed in a separate document - please refer to Zettlex IncOder App Note – Calculating Speed. You can find this in the IncOder section of our web-site (www.zettlex.com) or ask your local Celera Motion representative for a copy.

10.23. Does current consumption depend on supply voltage?
No - because we use linear voltage regulators in the IncOder stator.

Revision History - 4.11.5 to 4.11.6

- Note that changes are referenced to the original sections or pages in Rev 4.11.5
- Front page – Zettlex logo removed on all pages, title, revision and date updated
- N/A – Celera Motion replaced Zettlex on multiple pages
- Page 2 – number of product options increased
- Page 3 – BIS2 & BIS3 product options added
- Page 6 – BIS2 & BIS3 product options added
- Page 7 – URL updated to www.celeramotion.com, ISO updated
- Page 8 – Celera Motion added to text, Zettlex removed
- Page 8 – CAD download URL updated to www.celeramotion.com
- Page 9 – CAD download URL updated to www.celeramotion.com
- Page 10 – CAD download URL updated to www.celeramotion.com
- Page 11 – CAD download URL updated to www.celeramotion.com
- Page 13 – AFL5 definition edited
- Page 16 – max. speed data corrected for ABZ output, power up to 1st measurement corrected
- Page 18 – accuracy shown in arc-seconds, max. speed data corrected
- Page 19 – minimum order quantity for customised products increased
- Page 20 – power up time for zero setting changed to 5 seconds, BIS2-3 added, multi-turn option edited
- Page 27 – max. pulse frequency increased
- Page 28 – BIS2 & BIS3 product options added
- Page 29 – BIS2 & BIS3 added to connector diagram
- Page 30 – BIS2 & BIS3 added to product ordering, Note 5 updated to include BIS2-3
- Page 31 – BIS2 & BIS3 added to product ordering
- Page 32 – Celera Motion replaced Zettlex in introduction paragraph
- Page 37 – FAQ 10.6 updated
- Page 38 – URL updated to www.celeramotion.com in FAQ 10.22
- This table updated. Also note that Price Lists and 2 page IncOder Product Guide updated.

While Zettlex provides application assistance personally, through our literature, web-site and partners, it is the customer's responsibility to determine the suitability of the product in the application.

Specifications may change without notice. Quoted data is derived from test, analysis or design similarity. The information provided by Zettlex in this Product Guide is believed to be accurate and reliable as of this printing, however, Zettlex assumes no responsibility for its use.

WARRANTY/REMEDY

Zettlex warrants goods of its manufacture as being free of defective materials and faulty workmanship for 1 year from date of purchase. Zettlex standard product warranty applies unless agreed otherwise by Zettlex in writing. Please refer to Zettlex or local representative for warranty details. If warranted goods are returned to Zettlex during the warranty period then Zettlex will repair or replace, at its option, without charge those items that it finds defective. The foregoing is the buyer's sole remedy and is in lieu of all other warranties, expressed or implied, including those of merchantability and fitness for a particular purpose. In no event shall Zettlex be liable for consequential, special or indirect damages.

WARNING. PERSONAL INJURY.

Do not use these products as safety or emergency stop devices or in any application where failure of the product could result in personal injury. Failure to comply to these instructions could result in death or serious injury.

WARNING. PERSONAL INJURY.

Do not use these products in any application where there is the potential for combustion or explosion with flammable gases, dust or liquids. Failure to comply to these instructions could result in death or serious injury.

All products available via your local reseller or from the Celera Motion web-site at https://www.celeramotion.com

Zettlex UK Ltd.
Faraday House
Barrington Road
Foxton
Cambridge
CB22 6SL
United Kingdom
Tel [+44] 01223 874444
Fax [+44] 01223 874111
Email info.zettlex@celeramotion.com
www.celeramotion.com